# Exam Summer Semester 2023

## Student Group

| First Name | Surname | Matrikel Nr. |
|---|---|---|
| | | |
| | | |
| | | |

## Table of Contents

**Exam Summer Semester 2023** ..... 2
Additional permitted Aids ..... 2
Hits ..... 2
Tasks ..... 2
Exercise E1 Resistivity and temperature dependent Resistance (written test, approx. 7 % of a 60-minute written test, SS2023) ..... 2
Exercise E2 Analyzing a Scope Plot (written test, approx. 12 % of a 60-minute written test, SS2023) ..... 3
Exercise E3 Complex voltage dividers (written test, approx. 16 % of a 60-minute written test, SS2023) ..... 4
Exercise E1 Pure Resistor Network Simplification (written test, approx. 12 % of a 60-minute written test, SS2023) ..... 5
Exercise E2 Pure Resistor Network Simplification I (written test, approx. 14 % of a 60-minute written test, SS2023) ..... 7
Exercise E1 Equivalent Linear Source (written test, approx. 10 % of a 60-minute written test, SS2023) ..... 10
Exercise E4 (Dis)Charging Capacities (written test, approx. 14 % of a 60-minute written test, SS2023) ..... 13
Exercise E5 Impedances at Frequencies (written test, approx. 14 % of a 60-minute written test, SS2023) ..... 14
Exercise E1 Efficiency (written test, approx. 14 % of a 60-minute written test, SS2023) ..... 15

# Exam Summer Semester 2023

### Additional permitted Aids

- non-programmable calculator,
- formulary (2 DIN A4 pages)

### Hits

- The duration of the exam is 60 min.
- Attempts to cheat will lead to exclusion and failure of the exam.
- Withdrawal is no longer possible after these exam has been handed out.
- Please write down intermediate calculations and results on the assignment sheet. (when more space is needed also on the reverse side. In this case: Mark it clearly).
- Always use units in the calculation.
- Use a document-proof, non-red pen.

## Tasks

### Exercise E1 Resistivity and temperature dependent Resistance (written test, approx. 7 % of a 60-minute written test, SS2023)

The resistance of the dielectric material $R$ and $T$ for $55 ~\rm °C$ is calculated.

The resistance of the dielectric material $R$ and $T$ for $55 ~\rm °C$ is calculated.

The given film can exponential formula. In this case, the best fit would be a distance $T$ between $20 ~\rm °C$ and $100 ~\rm °C$.

Result

$R$ = 80 ~\rm G\Omega \cdot (1-0.048 ~\rm 1/K \cdot(35 ~{\rm K}) + 0.00057 ~\rm 1/K^2\cdot\Delta (35 ~{\rm K})^2 ) \end{align*}

Solution

The resistivity of the dielectric material is $\rho_{\rm PP}(20 ~\rm °C)=10^{17} ~\Omega m$.

For the given material the temperature coefficients in the range of $20 ~\rm °C$ and $55 ~\rm °C$ are given as $\alpha =-0.048 ~\rm 1/K$ and $\beta=+0.00057 ~\rm 1/K^2$.

\begin{align*} R(55 ~\rm °C) &= R(20 ~\rm °C) \cdot (1+\alpha\cdot\Delta T + \beta\cdot T^2 + ...)\\ &= 80 ~\rm G\Omega \cdot (1-0.048 ~\rm 1/K \cdot(35 ~{\rm K}) + 0.00057 ~\rm 1/K^2\cdot\Delta (35 ~{\rm K})^2 ) \end{align*}

Calculate the resistance for the dielectric material for $20 ~\rm °C$.

Solution

\begin{align*} R(20 ~\rm °C) &= \rho\cdot {{d}\over{A}}\\ &= 10^{17} ~\Omega \rm m \cdot {{0.8\cdot 10^{-6} ~\rm m}\over{1 ~\rm m^2}} \end{align*}

**Exercise E2 Analyzing a Scope Plot**
**(written test, approx. 12 % of a 60-minute written test, SS2023)**

4. What is the PMS value of the voltage and current and degree)?

Result

The measured current curve shall be visible as a dashed line.

**The continuous line shows the voltage.**

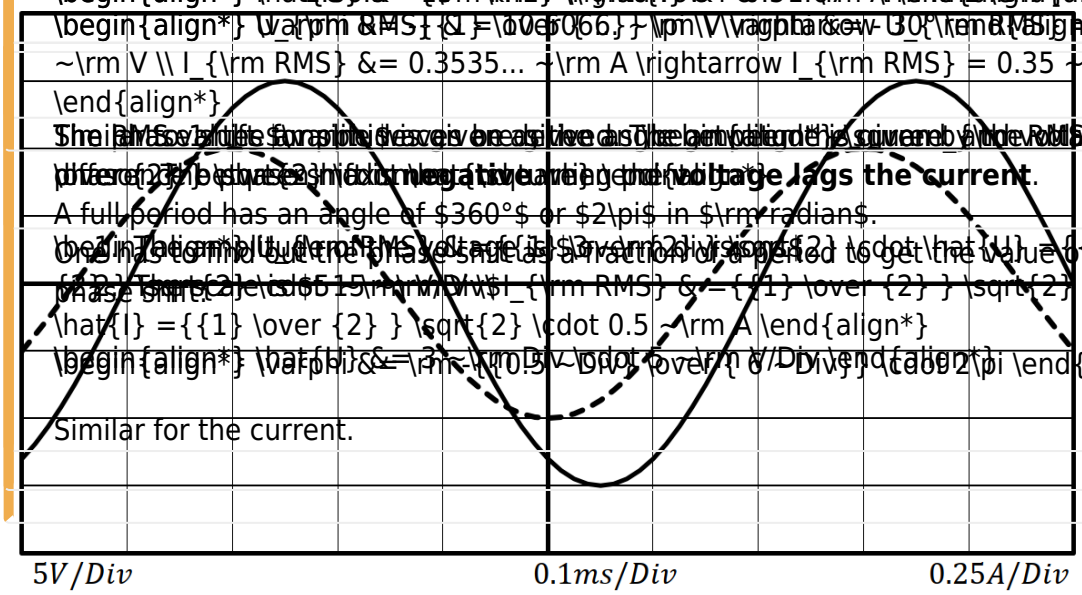


Use the correct symbols and units in your answers!

1. Calculate the frequency $f$ of the periodic signals.

Solution

Frequency $f$ is given by the period $T$. The period can be measured in the imagine of the scope.

1. The sine waves repeat after $6 ~\rm divisions$ (e.g. from falling turning point to falling turning point of one curve)
2. The scale is $0.1 ~\rm ms/Div$

\begin{align*} f &= {{1} \over {T}} \\ T &= 6 ~\rm Div \cdot 0.1 ~ms/Div \\
\rightarrow f &= {{1} \over {6 ~\rm Div \cdot 0.1 ~ms/Div}} \end{align*}

## Exercise E3 Complex voltage dividers
## (written test, approx. 16 % of a 60-minute written test, SS2023)

Result

Solution

Solution

\begin{align*} \underline{U}_{\rm O} &= 0.5 ~\rm V - j \cdot 1.5 ~V \end{align*}

The formula to start with is the (complex) voltage divider: \begin{align*} \underline{U}_{\rm O} &= \underline{U}_{\rm I} \cdot {R} \over {R+L+\rm j} \cdot \underline{Z}_L} \\ &= \underline{U}_{\rm I} \cdot {R} \over {R+\rm j} \cdot Z_L} \\ &= {{1 ~\rm V} \over {R+\rm j} \cdot Z_L} \cdot {R} \over {1} \\ &= {{1 ~\rm V} \over {R+\rm j} \cdot Z_L} \cdot {R} \over {1 ~\rm {V} \over {A} } \end{align*}

At cut-off frequency the absolute values of impedances $\underline{Z}_L$ is equal to $\underline{Z}_R=R$. This leads to \begin{align*} f_{\rm cutoff} &= {{R} \over {2\pi \cdot L}} \\ &= {{1 ~\rm V} \over {2\pi \cdot 3.5 \cdot 10^{-3} ~\rm {As} \over {V} } } \end{align*}

1. Calculate the impedance $\underline{Z}_L$.

Solution

\begin{align*} \underline{Z}_L &= {\rm j} \cdot \omega \cdot L \\ &= {\rm j} \cdot 2\pi \cdot 150 ~\rm kHz \cdot 3.5 ~\rm mH \end{align*}

**Exercise E1 Pure Resistor Network Simplification**
**(written test, approx. 12 % of a 60-minute written test, SS2023)**

2. Calculate the voltage at node $\rm K$, when switch $\rm S$ is closed.

Result

The values in the circuit are

Solution

- $R_1 = 60 ~\Omega$
- $R_2 = 40 ~\Omega$
- $R_3 = 40 ~\Omega$
- $R_4 = 100 ~\Omega$
- $U_{\rm AB} = 10 ~\rm V$

The equivalent resistance is $R_{\rm eq} = 150 ~\Omega$ in the circuit with opened switch. \begin{align*} R_{\rm eq} &= 150 ~\Omega \end{align*}

The voltage divider for node $\rm K$ has the same proportionality as the voltage divider from node $\rm A$. Therefore, the potential of $\rm K$ is the same as for $\rm K'$. There will be no current flow through $R_3$. The resistance does not create a voltage drop and therefore does not interfere with the circuit.

1. Calculate the voltage at node $\rm K$, when switch $\rm S$ is open.
It might be beneficial to redraw the circuit first.

Solution

Rearranging the circuit one can get:

Once the switch $\rm S$ is opened, the upper part is a parallel circuit. Therefore, $R_{\rm eq}$ is given as: \begin{align*} R_{\rm eq} &= (R_1+R_2)||(R_1+R_2)+R_4 \\ &= {{1}\over{2}}\cdot(R_1+R_2)+R_4 \\ &= {{1}\over{2}}\cdot(60~\Omega + 40~\Omega) + 100~\Omega \\ \end{align*}

**Exercise E2 Pure Resistor Network Simplification I**
**(written test, approx. 14 % of a 60-minute written test, SS2023)**

The circuit below should be given. The input voltage is given as $U_{\rm AB} = 60 ~\rm V$. What is the value for $U$ in the circuit?

Result

Solution

\begin{align*} I &= \frac{U_{\rm AB}}{R_{\rm eq}} = \frac{60~\rm V}{12~\Omega} = 5~\rm A \end{align*}

The current through the circuit is given as $I_{\rm AB} = U_{\rm AB} \cdot R_{\rm eq}$.
This current has to flow in summary through parallel branches. The voltage $U$ in question in the upper right branch given by $(4R||4R)+2R+2R$. Its resistance is just the same as the upper left branch $6R$.
Therefore, half of the current flows to the left half to the right side.

The voltage $U$ is consequently: \begin{align*} U &= {{I_{\rm AB} }\over{ 2\cdot R_{\rm eq} }} \\ &= {{U_{\rm AB} \cdot 2R }\over{ 2\cdot R_{\rm eq} }} \\ &= {{60 ~\rm V }\over{ 5 }} \end{align*}

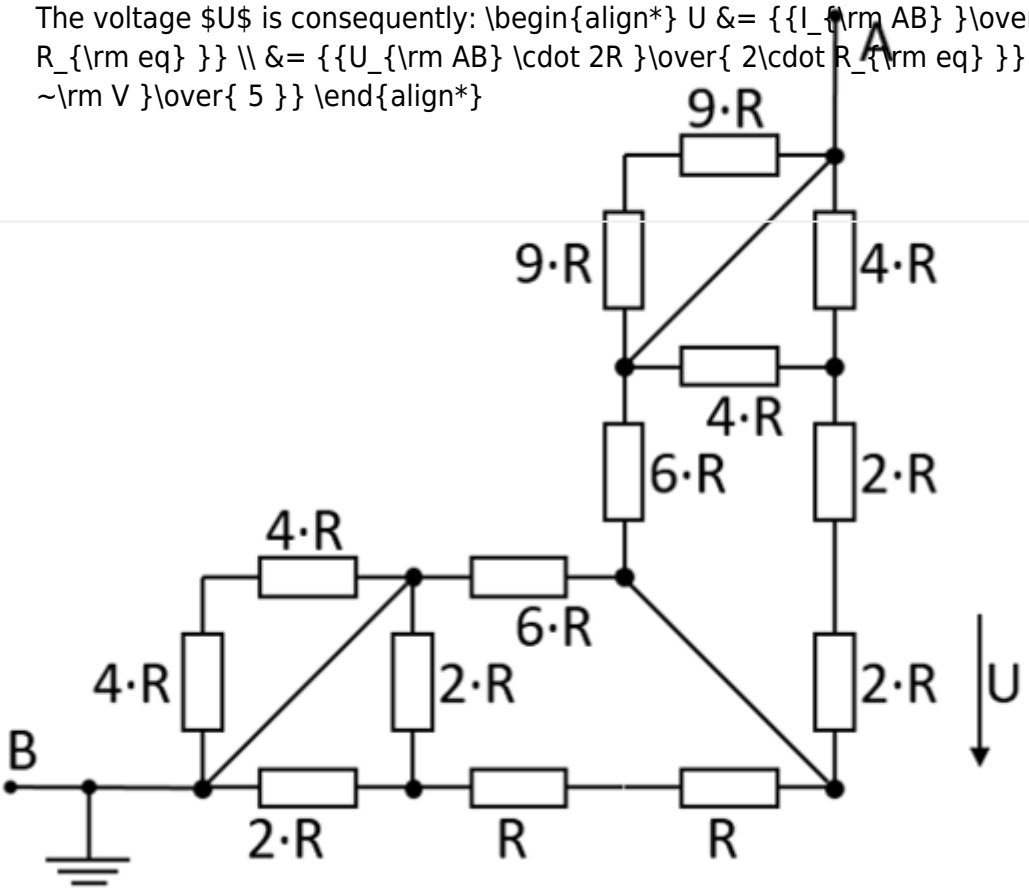


1. What is the equivalent resistance $R_{\rm eq}$?

Solution

Part of the circuit is shorted. Here the resistors (marked in red) are shorted by the connections marked in blue:

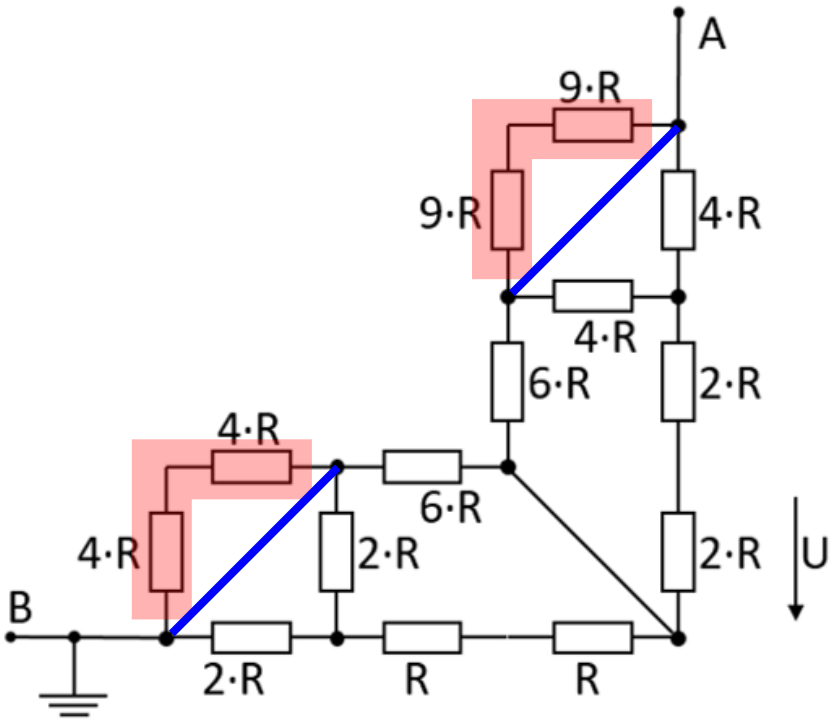


The circuit can then be rearranged for better interpretation:

Therefore, $R_{\rm eq}$ is given as: \begin{align*} R_{\rm eq} &= (2R||2R + R +

R)||6R &&+ 6R ||(2R + 2R + 4R||4R) \\ &= (R + R + R)||6R &&+ 6R ||(2R + 2R + 2R) \\ &= 3R||6R &&+ 6R ||6R \\ &= {{3R\cdot 6R}\over{3R+6R}} &&+3R \\ \end{align*}

**Exercise E1 Equivalent Linear Source**
**(written test, approx. 10 % of a 60-minute written test, SS2023)**

The circuit below has to be simplified. Use equivalent linear sources for simplification.
Calculate the internal resistance $R_\rm i$ and the source voltage $U_\rm s$ of an equivalent linear voltage source.

- $R_1 = 5 ~\Omega$
- $U_2 = 10 ~\rm V$
- $R_2 = 15 ~\Omega$
- $I_3 = 0.5 ~\rm A$
- $R_4 = 10 ~\Omega$
- $U_5 = 4 ~\rm V$

Result:

\begin{align*} U_\rm s &= U_{\rm AB} =1.11...~\rm V \\ R_{\rm i} &= 5.55... ~\Omega \end{align*}

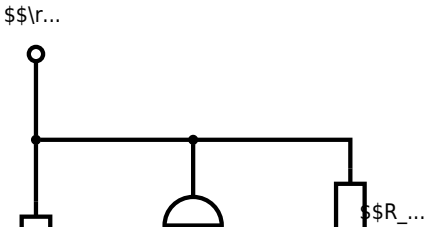


Solution

The principle idea here is to find parts of the circuit which are already a linear (voltage or current) source. Then this can be transformed into the equivalent other source, as shown in the next picture.

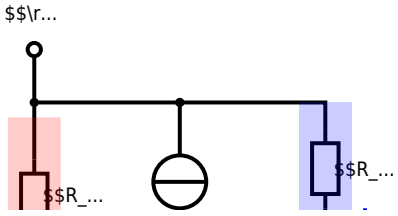


In order to get the currents one has to calculate it by $I_x = {{U_x}\over{R_x}}$ \begin{align*} I_0 &= {{U_0}\over{R_1}} = {{10~\rm V}\over{5 ~\Omega}} = 2 ~\rm A\\ I_5 &= {{U_5}\over{R_4}} = {{4 ~\rm V}\over{10~\Omega}} = 0.4 ~\rm A \\ \end{align*}

$I_3$ and $I_0$ can be combined to $I_{03}=I_0 - I_3$ facing upwards: \begin{align*} I_{03}=1.5~\rm A \end{align*}

Then, the linear current source $I_{03}$ with $R_1$ gets transformed into a linear voltage source with $U_{03}=R_1\cdot I_{03}$ facing down. \begin{align*} U_{03}=7.5~\rm V \end{align*}

Then, the resistors $R_1$ and $R_2$ can be combined to $R_{12}= R_1 + R_2$.

After this, the next step is to make a linear current source out of $U_{03}$ and $R_{12}$. The current will be $I_{0123}={{U_{03}}\over{R_{12}}}$, facing up again. \begin{align*} I_{0123}=0.6~\rm A \end{align*}

The second-last step is the sum up of the current sources $I_{0123}$ and $I_5$ as $I_{01235}=I_{0123}-I_5$ and the resistors as $R_{124}=R_{12}||R_4$. \begin{align*} I_{01235} &=0.2~\rm A \\ R_{124} &=5.55... ~\Omega \end{align*}

The final step is the back-transformation to a linear voltage source, with $U_{\rm AB} = R_{124} \cdot I_{01235}$.

The simplest and fastest (= for exams) is to work with interim results in the calculation.
Here, there there is also a full final formula given:

\begin{align*} U_\rm s &= U_{\rm AB} = I_{01235} \cdot R_{124} \\ &= (I_{0123}-I_5) \cdot (R_{12}||R_4) \\ &= \left({{U_{03}}\over{R_{12}}}-I_5\right) \cdot \left((R_1 + R_2)||R_4\right) \\ &= \left({{R_1\cdot I_{03}}\over{R_1+R_2}}-I_5\right) \cdot \left((R_1 + R_2)||R_4\right) \\ &= \left({{R_1\cdot \left({{U_0}\over{R_1}} - I_3\right)}\over{R_1+R_2}}-I_5\right) \cdot \left((R_1 + R_2)||R_4\right) \\ \end{align*}

**Exercise E4 (Dis)Charging Capacities**
**(written test, approx. 14 % of a 60-minute written test, SS2023)**

Shown is a circuit with a capacitor $C$ and two resistors $R_1$ and $R_2$. The switch $S_1$ switches to the situation shown in the drawing. What will be the Result
Solution

- $U = 10 ~\rm V$
- $C_1 = 200 ~\rm nF$
- $R_1 = 8.0 ~\rm k\Omega$
- $R_2 = 17 ~\rm k\Omega$

Solution

\begin{align*} \tau_1 &= R_1 \cdot C_1 = 8.0~\rm k\Omega \cdot 200~\rm nF \\ &= 1.6~\rm ms \end{align*}

\begin{align*} u_C(t) &= U_0 \cdot (1-e^{-t/\tau} ) \\ &= 10~\rm V \cdot (1-e^{-t/1.6~ms}) \end{align*}

\begin{align*} i_C(t) &= I_0 \cdot e^{-t/\tau} \\ &= 1.25~\rm mA \cdot e^{-t/1.6~ms} \end{align*}

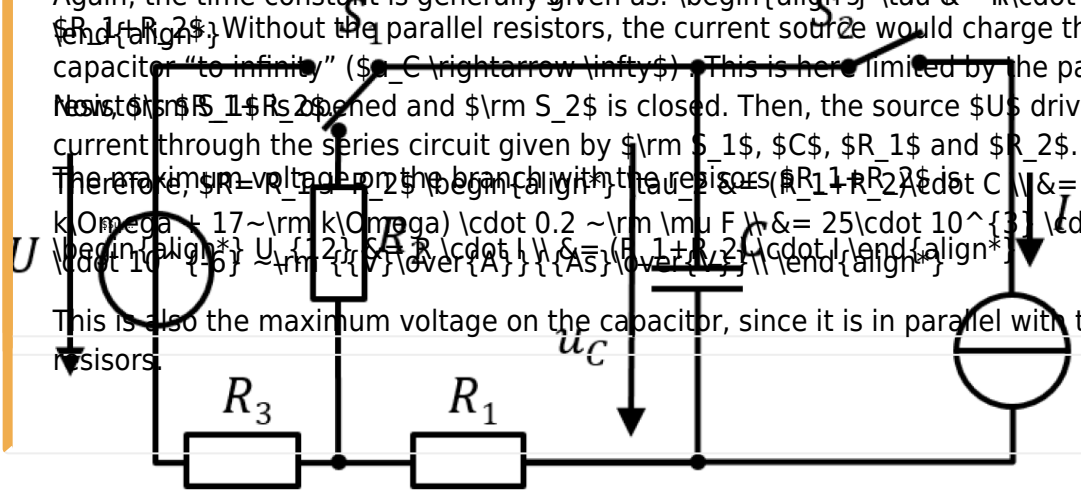


The current of the source flows through the circuit consisting of $C$ in parallel with $R_1+R_2$. Without the parallel resistors, the current source would charge the capacitor “to infinity” ($u_C \rightarrow \infty$). This is here limited by the parallel resistors, if $\rm S_1$ is opened and $\rm S_2$ is closed. Then, the source $U$ drives the current through the series circuit given by $\rm S_1$, $C$, $R_1$ and $R_2$.
Therefore, $R=R_1+R_2$

Again, the time constant is generally given as: \begin{align*} \tau &= R\cdot C \end{align*}

\begin{align*} \tau_2 &= (R_1+R_2)\cdot C \\ &= (8~\rm k\Omega + 17~\rm k\Omega) \cdot 0.2 ~\rm \mu F \\ &= 25\cdot 10^{3} \cdot 0.2 \cdot 10^{-6} ~\rm {{V}\over{A}}{{As}\over{V}} \\ \end{align*}

The maximum voltage on the branch with the resisors $R_1+R_2$ is:

\begin{align*} U_{12} &= R \cdot I \\ &= (R_1+R_2) \cdot I \end{align*}

This is also the maximum voltage on the capacitor, since it is in parallel with the resisors.

Before $t_0$ all switches are switched as shown and the capacitor is fully discharged.
At $t_0=0 ~\rm s$ the switch $S_1$ shall switch to the voltage source.

1. Calculate the time constant for charging the capacitor.

Solution

The time constant is generally given as: \begin{align*} \tau &= R\cdot C \end{align*}

Once $S_1$ is closed and $S_2$ is open at $t_0$, the source $U$ drives the current through the series circuit given by $S_1$, $C$, $R_1$ and $R_3$.
Therefore, $R= R_1 + R_3$ \begin{align*} \tau_1 &= (R_1+R_3)\cdot C \\ &= (8~\rm k\Omega + 7~\rm k\Omega) \cdot 0.2 ~\rm \mu F \\ &= 15\cdot 10^{3} \cdot 0.2 \cdot 10^{-6} ~\rm {{V}\over{A}}{{As}\over{V}}\\ \end{align*}

Solution

Both courses of the voltage for charging and discharging are described with an exponential function. However, the curve for charging increases first steep and flattens out for longer time scales ($\propto (1-e^{-x})$).

**Exercise E5 Impedances at Frequencies**
**(written test, approx. 14 % of a 60-minute written test, SS2023)**

At an inductor with $C_2 = 50~\rm \mu F$, the ohmic resistance $R_2 = 6.8~\rm \Omega$ and the

At an inductor with $C_2 = 50~\rm \mu F$, the ohmic resistance $R_2 = 6.8~\rm \Omega$ and the

Results are with $X_{L1} = 60 ~\rm \Omega$ and $L_1 = 15.9 ~\rm \mu H$.

Solution

\begin{align*} f_2 &= 3600 ~\rm kHz \\ f_2 &= 3600 ~\rm kHz \end{align*}

\begin{align*} X_{L2} &= X_{L1} \cdot {f_2 \over f_1} = 60 \cdot {3600 \over 2250} = 96 ~\rm \Omega \\ X_{C2} &= X_{C1} \cdot {f_1 \over f_2} = 60 \cdot {2250 \over 3600} = 37.5 ~\rm \Omega \end{align*}

\begin{align*} L_2 &= {X_{L2} \over \omega_2} = {96 \over 2\pi \cdot 3600} = 4.24 ~\rm mH \\ C_2 &= {1 \over \omega_2 \cdot X_{C2}} = {1 \over 2\pi \cdot 3600 \cdot 37.5} = 1.18 ~\rm \mu F \end{align*}

**Exercise E1 Efficiency**
**(written test, approx. 14 % of a 60-minute written test, SS2023)**

A battery with an internal resistance of $R_{\rm i} = 2 ~\rm \Omega$ and an open circuit voltage of $U_{\rm S} = 3.5 ~\rm V$. The battery shall provide energy for a mobile device with a load resistance of $R_{\rm L} = 10 ~\rm \Omega$. The following values are given:

- Typical capacity: $2600 ~\rm mAh$
- Lowest efficiency from the customer: $\eta_{\rm min} = 0.95$

1. Draw an **equivalent circuit diagram** with the internal resistance and an external load. Label all voltages and currents.
2. Calculate the battery's capacity in Ah.
3. Calculate the battery's capacity in Wh.
4. Calculate the battery's capacity in Ws.
5. Calculate the battery's capacity in C.
6. Calculate the battery's capacity in J.
7. Calculate the battery's capacity in eV.
8. Calculate the battery's capacity in kWh.
9. Calculate the battery's capacity in kJ.
10. Calculate the battery's capacity in MJ.
11. Calculate the battery's capacity in GJ.
12. Calculate the battery's capacity in TJ.
13. Calculate the battery's capacity in PJ.
14. Calculate the battery's capacity in EJ.
15. Calculate the battery's capacity in ZJ.
16. Calculate the battery's capacity in YJ.
17. Calculate the battery's capacity in RJ.
18. Calculate the battery's capacity in QJ.
19. Calculate the battery's capacity in $\rm J_{Planck}$.
20. Calculate the battery's capacity in $\rm J_{Hartree}$.
21. Calculate the battery's capacity in $\rm J_{Rydberg}$.
22. Calculate the battery's capacity in $\rm J_{Bohr}$.
23. Calculate the battery's capacity in $\rm J_{Hartree}$.
24. Calculate the battery's capacity in $\rm J_{Rydberg}$.
25. Calculate the battery's capacity in $\rm J_{Bohr}$.
26. Calculate the battery's capacity in $\rm J_{Hartree}$.
27. Calculate the battery's capacity in $\rm J_{Rydberg}$.
28. Calculate the battery's capacity in $\rm J_{Bohr}$.
29. Calculate the battery's capacity in $\rm J_{Hartree}$.
30. Calculate the battery's capacity in $\rm J_{Rydberg}$.
31. Calculate the battery's capacity in $\rm J_{Bohr}$.
32. Calculate the battery's capacity in $\rm J_{Hartree}$.
33. Calculate the battery's capacity in $\rm J_{Rydberg}$.
34. Calculate the battery's capacity in $\rm J_{Bohr}$.
35. Calculate the battery's capacity in $\rm J_{Hartree}$.
36. Calculate the battery's capacity in $\rm J_{Rydberg}$.
37. Calculate the battery's capacity in $\rm J_{Bohr}$.
38. Calculate the battery's capacity in $\rm J_{Hartree}$.
39. Calculate the battery's capacity in $\rm J_{Rydberg}$.
40. Calculate the battery's capacity in $\rm J_{Bohr}$.
41. Calculate the battery's capacity in $\rm J_{Hartree}$.
42. Calculate the battery's capacity in $\rm J_{Rydberg}$.
43. Calculate the battery's capacity in $\rm J_{Bohr}$.
44. Calculate the battery's capacity in $\rm J_{Hartree}$.
45. Calculate the battery's capacity in $\rm J_{Rydberg}$.
46. Calculate the battery's capacity in $\rm J_{Bohr}$.
47. Calculate the battery's capacity in $\rm J_{Hartree}$.
48. Calculate the battery's capacity in $\rm J_{Rydberg}$.
49. Calculate the battery's capacity in $\rm J_{Bohr}$.
50. Calculate the battery's capacity in $\rm J_{Hartree}$.
51. Calculate the battery's capacity in $\rm J_{Rydberg}$.
52. Calculate the battery's capacity in $\rm J_{Bohr}$.
53. Calculate the battery's capacity in $\rm J_{Hartree}$.
54. Calculate the battery's capacity in $\rm J_{Rydberg}$.
55. Calculate the battery's capacity in $\rm J_{Bohr}$.
56. Calculate the battery's capacity in $\rm J_{Hartree}$.
57. Calculate the battery's capacity in $\rm J_{Rydberg}$.
58. Calculate the battery's capacity in $\rm J_{Bohr}$.
59. Calculate the battery's capacity in $\rm J_{Hartree}$.
60. Calculate the battery's capacity in $\rm J_{Rydberg}$.
61. Calculate the battery's capacity in $\rm J_{Bohr}$.
62. Calculate the battery's capacity in $\rm J_{Hartree}$.
63. Calculate the battery's capacity in $\rm J_{Rydberg}$.
64. Calculate the battery's capacity in $\rm J_{Bohr}$.
65. Calculate the battery's capacity in $\rm J_{Hartree}$.
66. Calculate the battery's capacity in $\rm J_{Rydberg}$.
67. Calculate the battery's capacity in $\rm J_{Bohr}$.
68. Calculate the battery's capacity in $\rm J_{Hartree}$.
69. Calculate the battery's capacity in $\rm J_{Rydberg}$.
70. Calculate the battery's capacity in $\rm J_{Bohr}$.
71. Calculate the battery's capacity in $\rm J_{Hartree}$.
72. Calculate the battery's capacity in $\rm J_{Rydberg}$.
73. Calculate the battery's capacity in $\rm J_{Bohr}$.
74. Calculate the battery's capacity in $\rm J_{Hartree}$.
75. Calculate the battery's capacity in $\rm J_{Rydberg}$.
76. Calculate the battery's capacity in $\rm J_{Bohr}$.
77. Calculate the battery's capacity in $\rm J_{Hartree}$.
78. Calculate the battery's capacity in $\rm J_{Rydberg}$.
79. Calculate the battery's capacity in $\rm J_{Bohr}$.
80. Calculate the battery's capacity in $\rm J_{Hartree}$.
81. Calculate the battery's capacity in $\rm J_{Rydberg}$.
82. Calculate the battery's capacity in $\rm J_{Bohr}$.
83. Calculate the battery's capacity in $\rm J_{Hartree}$.
84. Calculate the battery's capacity in $\rm J_{Rydberg}$.
85. Calculate the battery's capacity in $\rm J_{Bohr}$.
86. Calculate the battery's capacity in $\rm J_{Hartree}$.
87. Calculate the battery's capacity in $\rm J_{Rydberg}$.
88. Calculate the battery's capacity in $\rm J_{Bohr}$.
89. Calculate the battery's capacity in $\rm J_{Hartree}$.
90. Calculate the battery's capacity in $\rm J_{Rydberg}$.
91. Calculate the battery's capacity in $\rm J_{Bohr}$.
92. Calculate the battery's capacity in $\rm J_{Hartree}$.
93. Calculate the battery's capacity in $\rm J_{Rydberg}$.
94. Calculate the battery's capacity in $\rm J_{Bohr}$.
95. Calculate the battery's capacity in $\rm J_{Hartree}$.
96. Calculate the battery's capacity in $\rm J_{Rydberg}$.
97. Calculate the battery's capacity in $\rm J_{Bohr}$.
98. Calculate the battery's capacity in $\rm J_{Hartree}$.
99. Calculate the battery's capacity in $\rm J_{Rydberg}$.
100. Calculate the battery's capacity in $\rm J_{Bohr}$.

Solution

\begin{align*} U_{\rm S} &= 3.5 ~\rm V \\ R_{\rm i} &= 2 ~\rm \Omega \\ R_{\rm L} &= 10 ~\rm \Omega \end{align*}

\begin{align*} I_{\rm Dis max} &= {U_{\rm S} \over R_{\rm i} + R_{\rm L}} = {3.5 ~\rm V \over 2 ~\rm \Omega + 10 ~\rm \Omega} = 0.29 ~\rm A \\ \eta_{\rm min} &= 1 - R_{\rm i} \cdot {I_{\rm Dis max} \over U_{\rm S}} \\ &= 1 - 2 ~\rm \Omega \cdot {0.29 ~\rm A \over 3.5 ~\rm V} = 0.95 \end{align*}

Result

\begin{align*} Q &= 2.6 ~\rm Ah \\ E &= 2.6 ~\rm Ah \cdot 3.5 ~\rm V = 9.1 ~\rm Wh \end{align*}

Solution

\begin{align*} \eta &= {U_{\rm S} - R_{\rm i} \cdot I_{\rm Dis max} \over U_{\rm S}} \\ &= 1 - R_{\rm i} \cdot {I_{\rm Dis max} \over U_{\rm S}} \\ &= 1 - 2 ~\rm \Omega \cdot {0.29 ~\rm A \over 3.5 ~\rm V} \\ &= 0.95 \end{align*}

Result

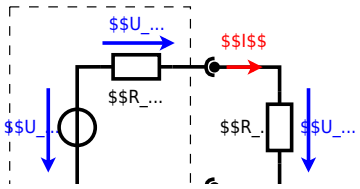


From:
https://mexle.te.hs-heilbronn.de/ - **MEXLE Wiki**

Permanent link:
**https://mexle.te.hs-heilbronn.de/electrical_engineering_and_electronics_1/ss2023_exam?rev=1768171400**

Last update: **2026/01/11 23:43**