Block 08 — Two-terminal theory and transforms

Student Group

First Name	Surname	Matrikel Nr.

Table of Contents

Block 08 — Two-port theory and transforms 3
Learning objectives 4
90-minute plan 4
Conceptual overview 4
Core content 4
1st sub-chapter 4
Superposition Principle 4
Example 1 - from an interview of a consulting company 4
Example 2 - Spring Force and Displacement 5
Notice: 5
Example 6
n'th sub-chapter 7
Common pitfalls 7
Exercises 7
Quick checks 7
Exercise E1.1 Title of the first exercise 7
Exercise E2.2 Title of the 2nd exercise 8
Longer exercises 8
Exercise E4.5.1 Converting a bipolar signal to a unipolar signal (HARD, not from written test) 8
Circuit 1 : only consider $U_{\rm S}$, ignore $U_{\rm I}$ 9
Circuit 2 : only consider $U_{\rm I}$, ignore $U_{\rm S}$ 9
Superposition: Let's sum it up! 10
Situation I : $U_{\rm I,min}= -15 ~\rm V$ shall create $U_{\rm O,min} = 0 ~\rm V$ 11
Situation II : $U_{\rm I,max}= +15 ~\rm V$ shall create $U_{\rm O,max} = 3.3 ~\rm V$ 11
Aufgabe 4.5.2: open circuit voltage via superposition (exam task, approx. 12 % of a 60-

minute exam, WS2020) 12
Exercise 4.5.3 -Variation: open circuit voltage via superposition (exam task, approx. 12 % of a 60-minute exam, WS2020) 15
Exercise 4.5.4 - Variation: open circuit voltage via superposition (exam task, approx. 12 % of a 60-minute exam, WS2020) 17
Embedded resources 17

Block 08 — Two-port theory and transforms

Fig. 1: examples for networks

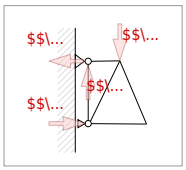

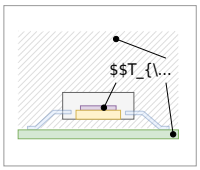

Network analysis plays a central role in electrical engineering. It is so important because it can be used to simplify what at first sight appear to be complicated circuits and systems to such an extent that they can be understood and results derived from them.

In addition, networks also occur in other areas, for example, the momentum flux through a truss or the heat flux through individual hardware elements (figure 1, or an example for heat flow through electronics). The concepts shown below can also be applied to these networks.

On the wiki page for network analysis the different methods are described very well in a compact way

- recap
- two-pole theory
- superposition

Learning objectives

<callout>

- Define / Distinguish / Apply / Use …

90-minute plan

1. Warm-up (5–10 min):
    1. Recall / Quick quiz …
2. Core concepts & derivations (60–70 min):
    1. …
3. Practice (10–20 min): …
4. Wrap-up (5 min): …

Conceptual overview

1. …

Core content

1st sub-chapter

…

Superposition Principle

The superposition principle shall first be illustrated by some examples:

Example 1 - from an interview of a consulting company

Task: Three students are to fill a pool. If Alice has to fill it alone, she would need 2 days. Bob would need 3 days and Carol would need 4 days. How long would it take all three to fill a pool if they helped together?

The question sounds far off-topic at first but is directly related. The point is that to solve it, filling the pool is assumed to be linear. So Alice will fill $1 \over 2$, Bob $1 \over 3$, and Carol $1 \over 4$ of the pool per day. So on the first day, ${1 \over 2}+{1 \over 3}+{1 \over 4} =

{{6 + 4 + 3} \over 12} = {13 \over 12}$ of the pool filled.
So the three of them need ${12 \over 13}$ of a day.

However, this solution path is only possible because in linear systems the partial results can be added.

Example 2 - Spring Force and Displacement

Fig. 3: mechanical spring

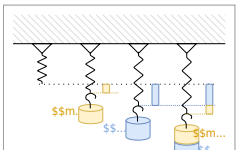

Task:A mechanical, linear spring is displaced due to masses m_1 and m_2 in the Earth's gravitational field (see figure 3). What is the magnitude of the deflection if both masses are attached simultaneously?

Again, a linear law is used here: \begin{align*} \vec{s}= f(\vec{F}) = - D \cdot \vec{F} \end{align*}

The (seemingly trivial) approach applies here: \begin{align*} \vec{s}_{1+2} = f(\vec{F_1} + \vec{F_2}) &= - D \cdot (\vec{F_1} + \vec{F_2}) \\ &= - D \cdot \vec{F_1} - D \cdot \vec{F_2} \\ &= f(\vec{F_1}) + f(\vec{F_2}) \\ &= \vec{s_1} + \vec{s_2} \end{align*}

Notice:

In a physical system in which effect and cause are linearly related, the effect of each cause can first be determined separately. The total effect is then the sum of the individual effects.

For electrical engineering this principle was described by Hermann_von_Helmholtz:

> The currents in the branches of a linear network are equal to the sum of the partial currents in the

> branches concerned caused by the individual sources.

Thus, in the superposition method, the current (or voltage) sought in a circuit with multiple sources can be viewed as a superposition of the resulting currents (or voltages) of the individual sources.

The “recipe” for the overlay is as follows:

1. Choose the next source x
2. Replace all ideal sources with their respective equivalent resistors:
    1. ideal voltage sources by short circuits
    2. ideal current sources by an open line
3. Calculate the partial currents sought in the branches considered.
4. Go to the next source x=x+1 [1)], and to point 2, as long as the partial currents of all sources have not been calculated.
5. Add up the partial currents in the branches under consideration, observing the correct sign.

This procedure is explained again in more detail using examples in the two videos on the right.

Simple view of the superposition principle

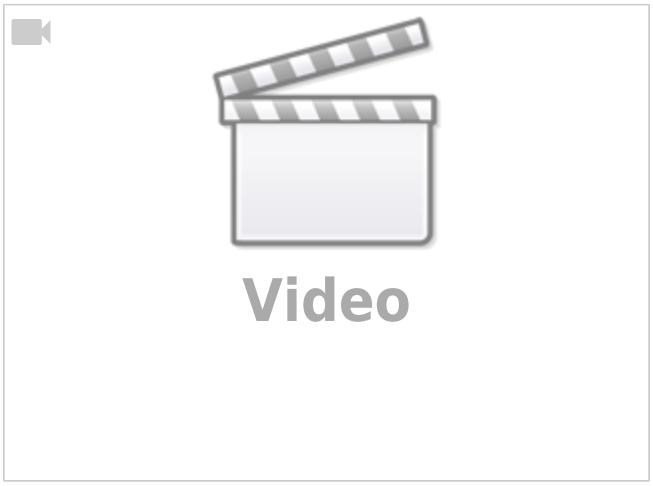

A more complex example of the superposition method

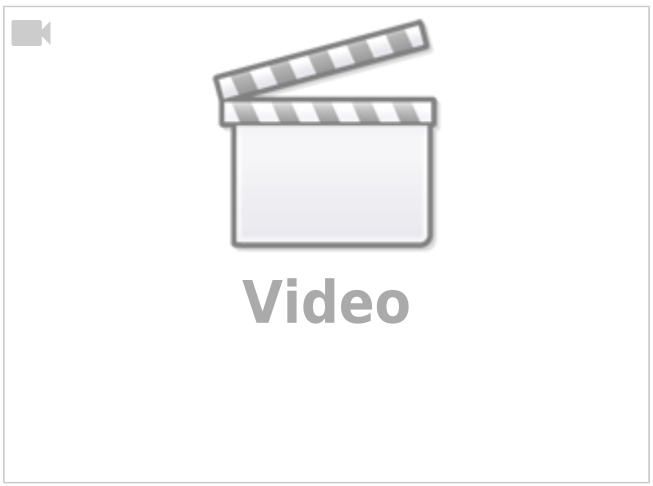

Example

Fig. 4: example circuit with superposition

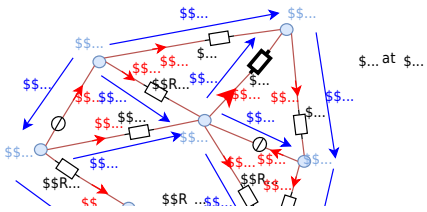

n'th sub-chapter

…

Common pitfalls

- …

…

Exercises

Quick checks

Exercise E1.1 Title of the first exercise

Here is a simple exercise …

Result

Here is the solution of the Exercise 1

Exercise E2.2 Title of the 2nd exercise

Here is another simple exercise ...

Result

Here is the solution of the Exercise 2

Longer exercises

Exercise E4.5.1 Converting a bipolar signal to a unipolar signal (HARD, not from written test)

Result

Solution

Questions:

1. Find the relationship between R_1, R_2, and R_3 using superposition.

Here is the solution of the Exercise 3

MEXLE Wiki - https://mexle.te.hs-heilbronn.de/

Begin{align*} Single values for R_1, R_2, R_3, R_4 and $U_{\rm S} - U_{\rm O}$ are given. What values for $U_{\rm O}$ and R over R_4 series
\end{align*} UNKNOWN can be used to do this?

Solution

The formula can be rearranged, with all terms containing $ U_{\rm O}$ on the left side: \begin{align*} {{U_{\rm O}}\over{R_1}} + {{U_{\rm O}}\over{R_2}} + {{U_{\rm O}}\over{R_4}} &= {{U_{\rm S}}\over{R_1}} + {{U_{\rm I}}\over{R_4}} \\ U_{\rm O}\cdot \left({{1}\over{R_1}} + {{1}\over{R_2}} + {{1}\over{R_4}} \right) &= {{U_{\rm S}}\over{R_1}} + {{U_{\rm I}}\over{R_4}} \\ \end{align*}
Using superposition, we create two separate circuits where one source is considered.
Both sides can be multiplied by $\cdot R_1 \cdot R_2 \cdot R_4$ in order to get rid of the fractions: \begin{align*} U_{\rm O}\cdot \left({{R_1 R_2 R_4 }\over{R_1}} + {{R_1 R_2 R_4 }\over{R_2}} + {{R_1 R_2 R_4 }\over{R_4}} \right) &= R_1 R_2 R_4 \cdot {{U_{\rm S}}\over{R_1}} + R_1 R_2 R_4 \cdot {{U_{\rm I}}\over{R_4}} \\ U_{\rm O}\cdot \left(R_2 R_4 + R_1 R_4 + R_1 R_2 \right) &= R_2 R_4 \cdot U_{\rm S} + R_1 R_2 \cdot U_{\rm I} \\ U_{\rm O} &= {{R_2}\over{R_2 R_4 + R_1 R_4 + R_1 R_2}} \left(R_4 \cdot U_{\rm S} + R_1 \cdot U_{\rm I} \right)\\ \end{align*}

The last formula was just the result we also got by the superposition but by more thinking.
So, sometimes there is an easier way...

- Unluckily, there is no simple way to know before, what way is the easiest.
- Luckily, all ways lead to the correct result.

Circuit 1 : only consider $U_{\rm S}$, ignore $U_{\rm I}$

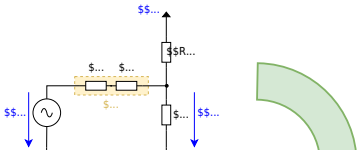

\begin{align*} U_{\rm O}^{(1)} &= U_{\rm S} \cdot {{R_2||R_4}\over{R_1 + R_2||R_4}} = U_{\rm S} \cdot {{ {{R_2 R_4}\over{R_2 + R_4}} }\over{R_1 + {{R_2 R_4}\over{R_2 + R_4}} }} \\ &= U_{\rm S} \cdot {{ R_2 R_4 }\over{R_1 (R_2 + R_4)+ R_2 R_4 }} \\ &= U_{\rm S} \cdot {{ R_2 R_4 }\over{R_1 R_2 + R_1 R_4 + R_2 R_4 }} \\ \end{align*}

Circuit 2 : only consider $U_{\rm I}$, ignore $U_{\rm S}$

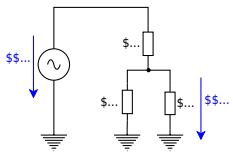

$$\begin{align*} U_{\rm O}^{(2)} &= U_{\rm I} \cdot {{R_1||R_2}\over{R_4 + R_1||R_2}} = U_{\rm I} \cdot {{ {{R_1 R_2}\over{R_1 + R_2}} }\over{R_4 + {{R_1 R_2}\over{R_1 + R_2}} }} \\ &= U_{\rm I} \cdot {{ R_1 R_2 }\over{R_4 (R_1 + R_2)+ R_1 R_2 }} \\ &= U_{\rm I} \cdot {{ R_1 R_2 }\over{R_4 R_1 + R_4 R_2+ R_1 R_2 }} \\ \end{align*}$$

Superposition: Let's sum it up!

These two intermediate voltages for the single sources have to be summed up as $U_{\rm O}= U_{\rm O}^{(1)} + U_{\rm O}^{(2)}$.
When deeper investigated, one can see that the denominator for both $U_{\rm O}^{(1)}$ and $U_{\rm O}^{(2)}$ is the same.
We can also simplify further when looking at often-used sub-terms (here: R_2)

$$\begin{align*} U_{\rm O} &= {{ 1 }\over{R_4 R_1 + R_4 R_2+ R_1 R_2 }} \cdot (U_{\rm S} \cdot R_2 R_4 + U_{\rm I} \cdot R_1 R_2) \\ U_{\rm O} \cdot (R_4 R_1 + R_4 R_2+ R_1 R_2) &= U_{\rm S} \cdot R_2 R_4 + U_{\rm I} \cdot R_1 R_2 \\ \\ U_{\rm O} \cdot ({{R_1 R_4}\over{R_2}} + R_4 + R_1) &= U_{\rm S} \cdot R_4 + U_{\rm I} \cdot R_1 \tag 1 \\ \end{align*}$$

The formula (1) is the general formula to calculate the output voltage $U_{\rm O}$ for a changing input voltage $U_{\rm I}$, where the supply voltage $U_{\rm S}$ is constant.

Now, we can use the requested boundaries:

1. For the minimum input voltage $U_{\rm I}= -15 ~\rm V$, the output voltage shall be $U_{\rm O} = 0 ~\rm V$
2. For the maximum input voltage $U_{\rm I}= +15 ~\rm V$, the output voltage shall be $U_{\rm O} = 3.3 ~\rm V$

This leads to two situations:

Situation I : $U_{\rm I,min}= -15 ~\rm V$ shall create $U_{\rm O,min} = 0 ~\rm V$

We put $U_{\rm A} = 0 ~\rm V$ in the formula (1) : \begin{align*} 0 &= U_{\rm S} \cdot R_4 + U_{\rm I,min} \cdot R_1 \\ - U_{\rm I,min} \cdot R_1 &= U_{\rm S} \cdot R_4 \\ {{R_1}\over{R_4}} &=-{{U_{\rm S}}\over {U_{\rm I,min}}} = k_{14} \tag 2 \\ \end{align*}

So, with formula (2), we already have a relation between R_1 and R_4. Yeah
The next step is situation 2

Situation II : $U_{\rm I,max}= +15 ~\rm V$ shall create $U_{\rm O,max} = 3.3 ~\rm V$

We use formula (2) to substitute $R_1 = k_{14} \cdot R_4 $ in formula (1), and: \begin{align*} U_{\rm O,max} \cdot (k_{14}{{ R_4^2}\over{R_2}} + R_4 + k_{14} R_4) &= U_{\rm S} \cdot R_4 + U_{\rm I,max} \cdot k_{14} R_4 \\ U_{\rm O,max} \cdot (k_{14}{{ R_4 }\over{R_2}} + 1 + k_{14}) &= U_{\rm S} + U_{\rm I,max} \cdot k_{14} \\ k_{14}{{ R_4 }\over{R_2}} + 1 + k_{14} &= {{U_{\rm S} + U_{\rm I,max} \cdot k_{14} }\over{ U_{\rm O,max} }} \\ k_{14}{{ R_4 }\over{R_2}} &= {{U_{\rm S} + U_{\rm I,max} \cdot k_{14} }\over{ U_{\rm O,max} }} - (1 + k_{14})\\ {{ R_4 }\over{R_2}} &= {{U_{\rm S} + U_{\rm I,max} \cdot k_{14} }\over{ k_{14} U_{\rm O,max} }} - {{1 + k_{14} }\over{k_{14}}} \tag 3 \\ \end{align*}

So, another relation for R_4 and R_2.

So, to get values for the relations, we have to put in the values for the input and output voltage conditions. For k_{14} we get by formula (2): \begin{align*} k_{14} = {{R_1}\over{R_4}} =-{{5 ~\rm V}\over {-15 ~\rm V }} = {{1}\over{3}} \\ \end{align*}

This value k_{14} we can use for formula (3): \begin{align*} {{ R_4

}\over{R_2}} &= {{5 ~\rm V + 15 ~\rm V \cdot {{1}\over{3}} }\over{ 3.3 ~\rm V \cdot {{1}\over{3}} }} - {{1 + {{1}\over{3}} }\over{ {{1}\over{3}} }} \\ &= {{10}\over{1.1}} - 4 \\ k_{42} &\approx 5.09 \end{align*}

We could now - theoretically - arbitrarily choose one of the resistors, e.g., R_2, and then calculate the other two.

But we must consider another boundary, a boundary for $R_{\rm S}$. The maximum voltage and the maximum current are given for the sensor. By this, we can calculate $R_{\rm S}$: \begin{align*} R_{\rm S} &= {{ U_{\rm OC} }\over{ I_{\rm SC} }} = {{ U_{\rm S,max} }\over{ I_{\rm S,max} }} = {{ 15 ~\rm V }\over{ 1 ~\rm mA }} \\ &= 15 ~\rm k\Omega \end{align*}

Therefore, $R_4 = R_{\rm S} + R_3$ must be larger than this.

Aufgabe 4.5.2: open circuit voltage via superposition (exam task, approx. 12 % of a 60-minute exam, WS2020)

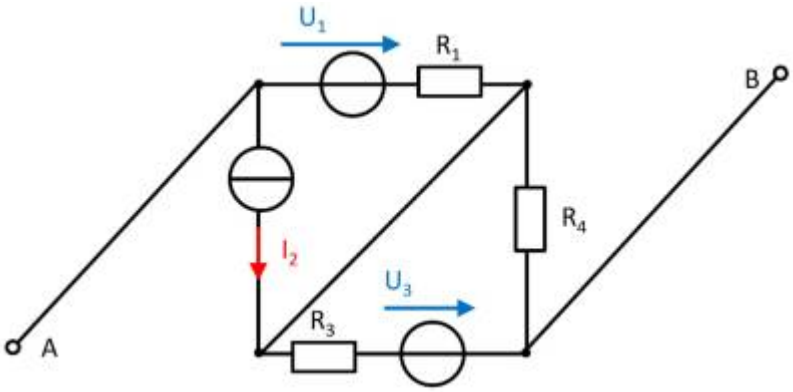

A circuit is given with the following parameters
$R_1=5 ~\Omega$
$U_1=2 ~\rm V$
$I_2=1 ~\rm A$
$R_3=20 ~\Omega$
$U_3=8 ~\rm V$
$R_4=10 ~\Omega$

Determine the open circuit voltage between A and B using the principle of superposition.

Tips

- What do the individual circuits look like, by which the effects of the individual sources can be calculated?
  Which equivalent resistor must be used to replace a current or voltage source when calculating the individual effects?
- Where are the open-circuit voltages applied when looking at the individual

components?

Solution

First, the individual circuits must be created, from which the effect of the individual sources between points A and B can be determined.

(Voltage) source U_1

- substitute the current source I_2 with a short-circuit
- substitute the voltage source U_3 with an open circuit

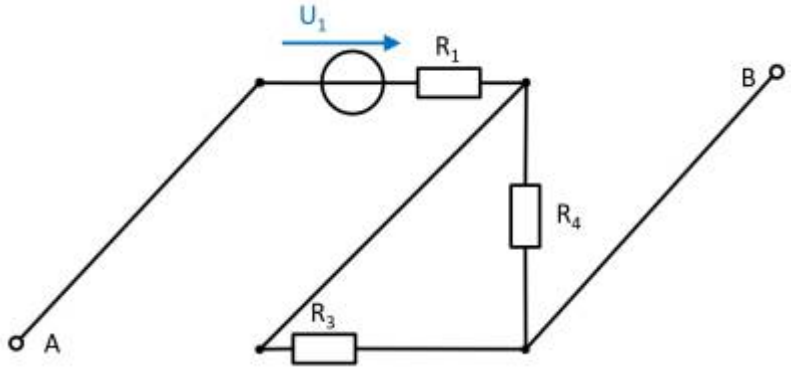

The components can be moved in order to understand the circuit s bit better.

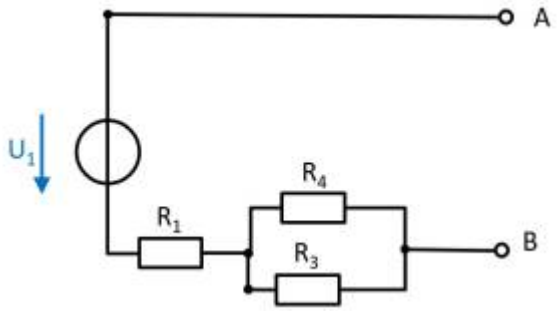

For the open circuit, no current is flowing through any resistor. Therefore, the effect is: $U_{AB,1} = U_1$

(current) source I_2

- substitute the voltage source U_1 with an open circuit
- substitute the voltage source U_3 with an open circuit

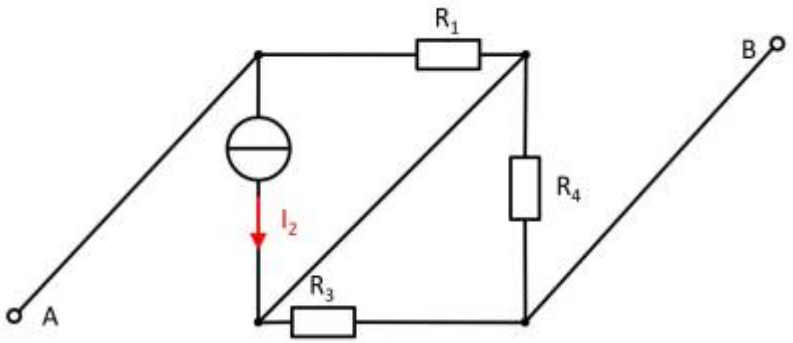

Also here, the components can be shifted for a better understanding:

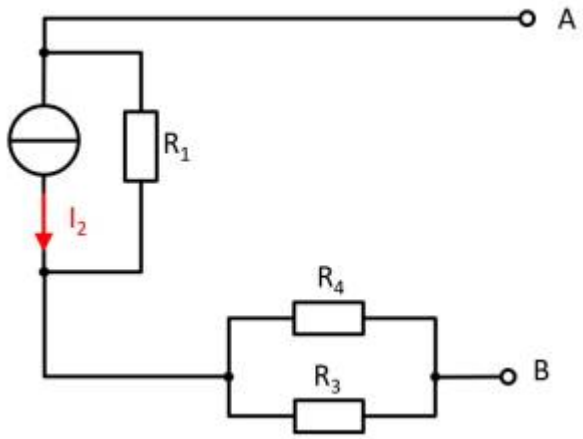

Here, the current source I_2 creates a voltage drop U_{AB_2} on the resistor R_2 : $U_{\rm AB,2} = - R_1 \cdot I_2$

(Voltage) source U_3

- substitute the voltage source U_1 with an open circuit
- substitute the current source I_2 with a short-circuit

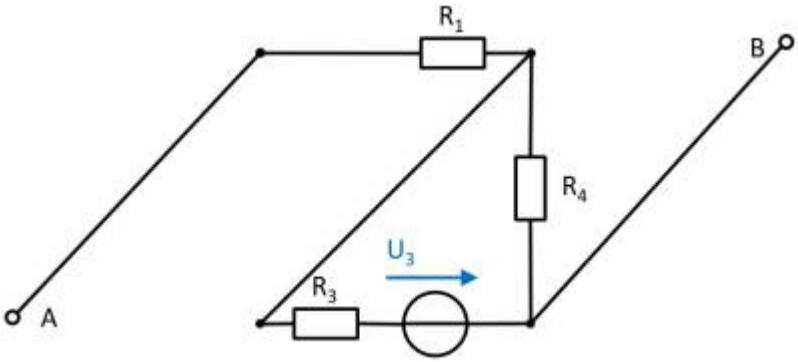

Again, rearranging the circuit might help for an understanding:

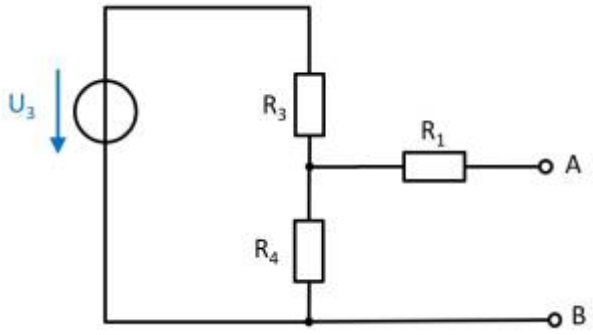

In this case, between the unloaded outputs $\rm A$ and $\rm B$ there will be an unloaded voltage divider given by R_3 and R_4. On R_1 there is no voltage drop since there is no current flow out of the unloaded outputs.
Therefore:

$$\begin{align*} U_{\rm AB,3} = \frac{R_4}{R_3 + R_4} \cdot U_3 \end{align*}$$

resulting voltage

$$\begin{align*} U_{\rm AB} &= U_1 - R_1 \cdot I_2 + \frac{R_4}{R_3 + R_4} \cdot U_3 \\ \end{align*}$$

Final value

$$\begin{align*} U_{\rm AB} &= 2 ~{\rm V} - 5 ~\Omega \cdot 1 ~{\rm A} + \frac{10 ~\Omega}{20 ~\Omega + 10 ~\Omega} \cdot 8 ~{\rm V} \\ \\ U_{\rm AB} & = - 0.333... ~{\rm V} \rightarrow - 0.3 ~{\rm V} \\ \end{align*}$$

Exercise 4.5.3 -Variation: open circuit voltage via superposition (exam task, approx. 12 % of a 60-minute exam, WS2020)

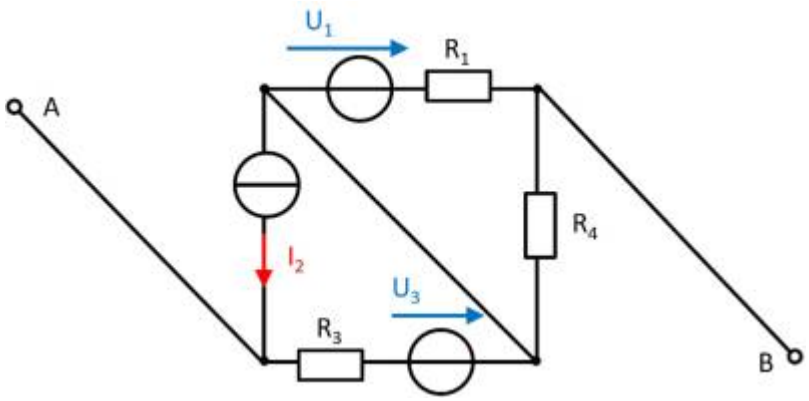

A circuit is given with the following parameters
$R_1=5 ~\Omega$
$U_1=2 ~{\rm V}$
$I_2=1 ~{\rm A}$
$R_3=20 ~\Omega$
$U_3=8 ~{\rm V}$
$R_4=10 ~\Omega$

Determine the open circuit voltage between A and B using the principle of superposition.
Solution

Case 1: For this case is $I_2 = 0~{\rm A}$ and $U_3 = 0~{\rm V}$. The voltage is at R_4.

\begin{align*} U_{\rm AB,1} = \frac{R_4}{R_1+R_4} U_1 = \frac{10~\Omega}{5~\Omega+10~\Omega} \cdot 2~{\rm V} = 1.33~{\rm V} \end{align*}
Case 2: For this case is $U_1 = 0~{\rm V}$ and $U_3 = 0~{\rm V}$. The voltage is at R_3.

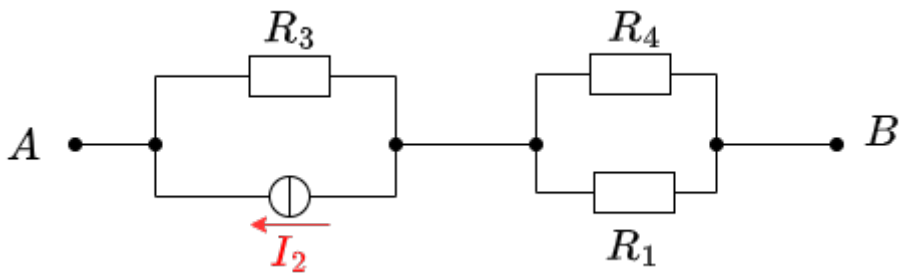

\begin{align*} U_{\rm AB,2} = R_3 I_2 = 20~\Omega \cdot 1~{\rm A} = 20~{\rm V} \end{align*}
Case 3: For this case is $U_1 = 0~{\rm V}$ and $I_2 = 0~{\rm A}$. The voltage comes from the source U_3.

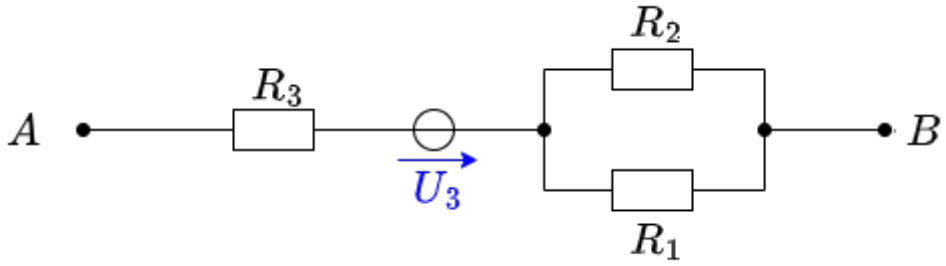

\begin{align*} U_{\rm AB,3} = 8~{\rm V} \end{align*} Superposition means adding the voltages of all three cases. \begin{align*} U_{\rm AB} = U_{\rm AB,1} + U_{\rm AB,2} + U_{\rm AB,3} = 1.33~{\rm V} + 20~{\rm V} + 8~{\rm V} \end{align*}

Final value

\begin{align*} U_{AB} = 29.333... ~{\rm V} \rightarrow 29.3 ~{\rm V} \\ \end{align*}

Exercise 4.5.4 - Variation: open circuit voltage via superposition (exam task, approx. 12 % of a 60-minute exam, WS2020)

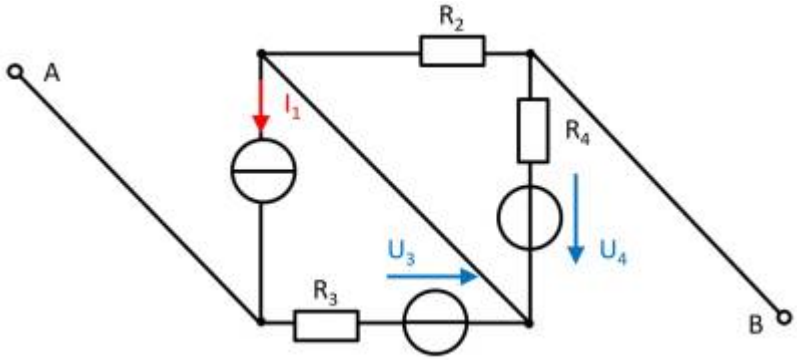

A circuit is given with the following parameters
$I_1 = 2 ~{\rm A}$
$R_2 = 5 ~\Omega$
$R_3 = 20 ~\Omega$
$U_3 = 1 ~{\rm V}$
$R_4 = 10 ~\Omega$
$U_4 = 3 ~{\rm V}$

Determine the open circuit voltage between A and B using the principle of superposition.

Embedded resources

Introduction to Superposition Method (starting from 34:24, Befor there are other methods not covered here)	Here are the youtube resource 2	… [1] x=x+1

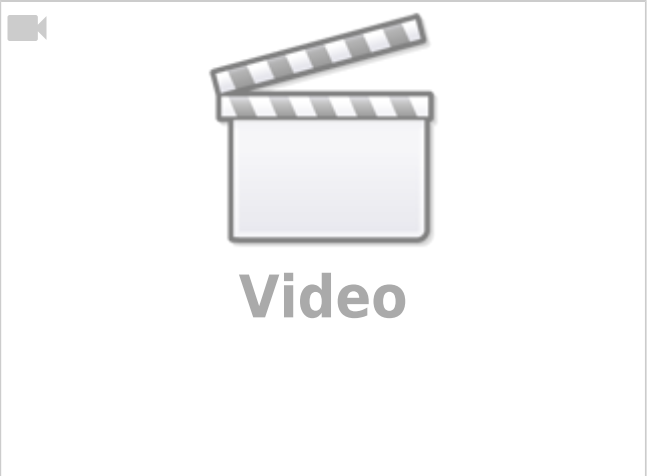

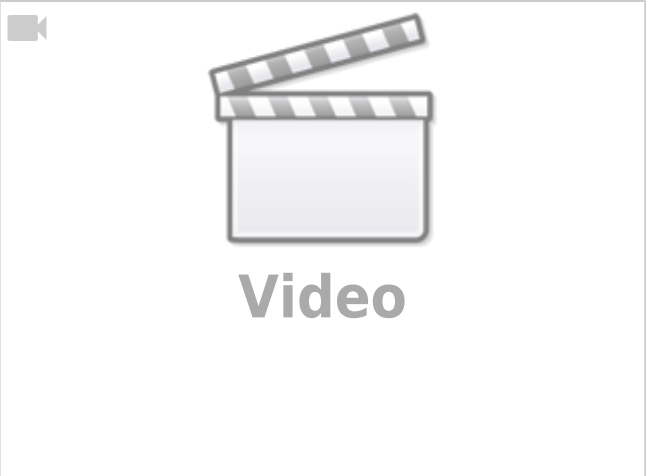

is not meant mathematically, but procedurally as in the programming language C

From:
https://mexle.te.hs-heilbronn.de/ - **MEXLE Wiki**

Permanent link:
https://mexle.te.hs-heilbronn.de/electrical_engineering_and_electronics_1/block08?rev=1760914920

Last update: **2025/10/20 01:02**