Exam Winter Semester 2022

Student Group

First Name	Surname	Matrikel Nr.

Table of Contents

Exercise E1 Equivalent linear Source (written test, approx. 14 % of a 60-minute written test, WS2022) 3
Exercise E1 Temperature-dependent Resistance (written test, approx. 6 % of a 60-minute written test, WS2022) 6
Exercise E2 Analyzing complex Impedances (written test, approx. 14 % of a 60-minute written test, WS2022) 7
Exercise E1 Complex Impedance Circuit (written test, approx. 15 % of a 60-minute written test, WS2022) 7
Exercise E3 Impedances at different Frequencies (written test, approx. 18 % of a 60-minute written test, WS2022) 11
Exercise E4 Resistance of a Wire by Resistivity (written test, approx. 6 % of a 60-minute written test, WS2022) 11
Exercise E5 Charging Capacitors (written test, approx. 16 % of a 60-minute written test, WS2022) 12
Exercise E6 Pure Resistor Network Simplification (written test, approx. 13 % of a 60-minute written test, WS2022) 13
Exercise E3 Equivalent linear Source (written test, approx. 14 % of a 60-minute written test, WS2022) 15
Exercise E2 Temperature-dependent Resistance (written test, approx. 6 % of a 60-minute written test, WS2022) 19
Exercise E5 Analyzing complex Impedances (written test, approx. 14 % of a 60-minute written test, WS2022) 20
Exercise E7 Complex Impedance Circuit (written test, approx. 15 % of a 60-minute written test, WS2022) 20
Exercise E6 Impedances at different Frequencies (written test, approx. 18 % of a 60-minute written test, WS2022) 24
Exercise E1 Resistance of a Wire by Resistivity (written test, approx. 6 % of a 60-minute written test, WS2022) 24
Exercise E4 Charging Capacitors (written test, approx. 16 % of a 60-minute written test,

WS2022) 25
Exercise E3 Pure Resistor Network Simplification (written test, approx. 13 % of a 60-minute written test, WS2022) 26

'~~#@ee1_taskctr.#~~'

Exercise E1 Equivalent linear Source
(written test, approx. 14 % of a 60-minute written test, WS2022)

The circuit in the following has to be simplified.
Result

\begin{align*} U_{\rm s} &= U_{\rm AB} &&= 4.5 ~\rm{V}\\ R_{\rm i} &= R_{\rm AB} &&= 6 ~\Omega \end{align*}

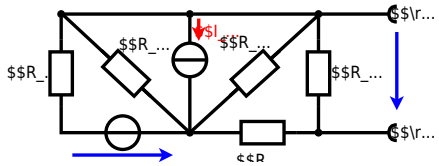

Calculated the internal resistance $R_\rm i$ and the source voltage $U_\rm s$ of an equivalent linear voltage source on the connectors $\rm A$ and $\rm B$. \begin{align*} R_1=5.0 ~\Omega, && U_2=6.0 ~\rm{V}, && R_3= 10 ~\Omega, \\ I_4=4.2 ~\rm{A}, && R_5=10 ~\Omega , && R_6=7.5 ~\Omega, \\ R_7=15 ~\Omega && && \end{align*} Use equivalent sources in order to simplify the circuit!

Solution

The best thing is to re-think the wiring like rubber bands and adjust them:

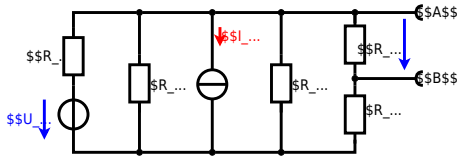

The linear voltage source of U_2 and R_1 can be transformed into a current source $I_2={{U_2}\over{R_1}}$ and R_1:

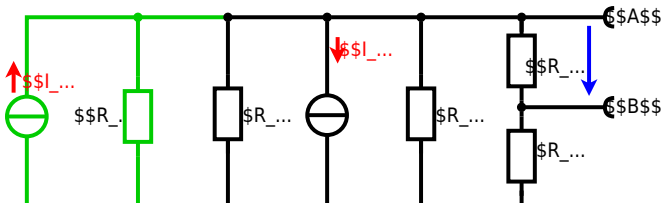

Now a lot of them can be combined. The resistors R_1, R_3, R_5 are in parallel, like also I_2 and I_4: \begin{align*} R_{135} &= R_1||R_3||R_5\\ I_{24} &= I_2 - I_4 = {{U_2}\over{R_1}} - I_4 \end{align*} The resulting circuit can again be transformed:

Here, the U_{24} is calculated by I_{24} as the following: \begin{align*} U_{24}

&= R_{135} \cdot I_{24} \\ &= ({{U_2}\over{R_1}} - I_4) \cdot R_1||R_3||R_5 \end{align*}

On the right side of the last circuit, there is a voltage divider given by R_{135}, R_6, and R_7.
Therefore the voltage between A and B is given as: \begin{align*} U_{\rm AB} &= U_{24} \cdot {{R_7}\over{R_6 + R_7 + R_1||R_3||R_5}} \\ &= ({{U_2}\over{R_1}} - I_4) \cdot {{R_7 \cdot R_1||R_3||R_5}\over{R_6 + R_7 + R_1||R_3||R_5}} \\ \end{align*}

For the internal resistance R_i the ideal voltage source is substituted by its resistance ($=0\Omega$, so a short-circuit): \begin{align*} R_{\rm AB} &= R_7 || (R_6 + R_1||R_3||R_5) \\ \end{align*}

with $R_1||R_3||R_5 = 5 ~\Omega || 10 ~\Omega || 10 ~\Omega = 5 ~\Omega || 5 ~\Omega = 2.5 ~\Omega$:

\begin{align*} U_{\rm AB} &= ({{6.0 ~\rm{V}}\over{5.0 ~\Omega}} - 4.2 ~\Omega) \cdot {{15 ~\Omega \cdot 2.5 ~\Omega}\over{7.5 ~\Omega + 15 ~\Omega + 2.5 ~\Omega}} \\ R_{\rm AB} &= 15 ~\Omega|| (7.5 ~\Omega + 2.5 ~\Omega) \\ \end{align*}

'~~#@ee1_taskctr.#~~'

Exercise E1 Temperature-dependent Resistance
(written test, approx. 6 % of a 60-minute written test, WS2022)

A thermistor is a temperature sensitive resistor. Its resistance changes with temperature.
Its temperature coefficients are: $\alpha=0.01 ~{{1}\over{\rm{K}}}$ and $\beta=71 \cdot 10^{-6}~{{1}\over{\rm{K}^2}}$

Result

1. Calculate the resistance of the thermistor at $40 ~°\rm{C}$.

\begin{align*} R &= 6.5 ~\rm{k}\Omega \\ \end{align*}

Solution

The power of the resistor is $P=U\cdot I = R\cdot I^2 = {{U^2}\over{R}}$. Therefore, a decrease of the resistance by a factor of ten increases the heat flow up the refrigeration system.
Therefore, with constant U and increasing R the power decreases. Ten times more resistance decreases the heat flow to one-tenth.

\begin{align*} R &= R_0 \cdot (1 + \alpha \cdot \Delta T + \beta \cdot \Delta T^2) && | \text{with } \Delta T = T_{\rm end} - T_{\rm start}\\ R &= 10 ~\rm{k}\Omega \cdot \left(1 + 0.01 ~{{1}\over{\rm{K}}} \cdot (-40~°\rm{C} - 25~°\rm{C}) + 71 \cdot 10^{-6}~{{1}\over{\rm{K}^2}} \cdot (-40~°\rm{C} - 25~°\rm{C})^2 \right) \\ \end{align*}

'~~#@ee1_taskctr.#~~'

Exercise E2 Analyzing complex Impedances
(written test, approx. 14 % of a 60-minute written test, WS2022)

A. Calculate the physical values of the two components.
B. Calculate the phase angle between the voltage and the current through the circuit.
C. Draw the phasor diagram for the given circuit.

Result

The analysis shall lead to the following results:
- $R = 0.24 ~\Omega$
- $C = 1.07 ~\mathrm{mF}$
- $\varphi = -87.06°$

Solution

The current and voltage are in phase once there is only a pure ohmic (= pure real) resulting impedance $\underline{Z} = \underline{X}_2$.
Therefore, the component must be a capacitor with the same absolute value of impedance: $|\underline{X}_C| = |\underline{X}_2|$

$$\begin{aligned} \underline{Z} &= \left({{2}\over{3+4{\rm j}}}+5{\rm j} \right) \Omega \end{aligned}$$

$$\begin{aligned} \underline{Z} &= \left({{2}\over{3+4{\rm j}}}+5{\rm j} \right) \Omega \\ &= \left({{2}\over{9+16}} \cdot (3-4{\rm j}) + 5{\rm j} \right) ~\Omega \\ &= \left({{2}\over{25}} \cdot (3-4{\rm j}) + 5{\rm j} \right) ~\Omega \\ &= 0.24 ~\Omega - {\rm j} \cdot 0.32 ~\Omega + 5{\rm j} ~\Omega \\ &= 0.24 ~\Omega + {\rm j} \cdot 4.68 ~\Omega \end{aligned}$$

$$\begin{aligned} \underline{I} &= {{\underline{U}}\over{\underline{Z}}} \\ &= {{50 ~\mathrm{V}}\over{ 0.24 ~\Omega + {\rm j} \cdot 4.68 ~\Omega }} \\ &= {{50 ~\mathrm{V}}\over{ 0.24 ~\Omega + {\rm j} \cdot 4.68 ~\Omega }} \cdot {{ 0.24 ~\Omega - {\rm j} \cdot 4.68 ~\Omega }\over{ 0.24 ~\Omega - {\rm j} \cdot 4.68 ~\Omega }} \\ &= {{50 ~\mathrm{V} \cdot (0.24 ~\Omega - {\rm j} \cdot 4.68 ~\Omega)}\over{ 0.24^2 ~\Omega^2 + 4.68^2 ~\Omega^2 }} \\ &= 0.24 ~\mathrm{A} - {\rm j} \cdot 4.68 ~\mathrm{A} \end{aligned}$$

With the complex part comes the physical value:

$$\begin{aligned} X_L &= \omega \cdot L \\ &= 2\pi \cdot f \cdot L \\ &= 2\pi \cdot 300 ~\mathrm{Hz} \cdot 4.68 ~\Omega \end{aligned}$$

$$\begin{aligned} X_L &= \omega \cdot L \\ &= 2\pi \cdot f \cdot L \\ &= 2\pi \cdot 300 ~\mathrm{Hz} \cdot 4.68 ~\Omega \\ &= 2\pi \cdot 1404 ~\mathrm{Hz}\cdot\Omega \\ &= 8824 ~\mathrm{Hz}\cdot\Omega \end{aligned}$$

Thus the inductance is $L = 8824 ~\mathrm{H}$.

The phase φ_i can be calculated as

$$\begin{aligned} \varphi_i &= \arctan \left({{\Im()}\over{\Re()}} \right) \\ &= \arctan \left({{-4.68 ~\Omega}\over{0.24 ~\Omega}} \right) \\ \end{aligned}$$

'~~#@ee1_taskctr.#~~'

Exercise E1 Complex Impedance Circuit
(written test, approx. 15 % of a 60-minute written test, WS2022)

A. Calculate the resulting impedance $\underline{Z}$ of the circuit.
B. Calculate the current $\underline{I}$ through the source.
C. Draw the phasor diagram for the source voltage and current.

Result

The resulting impedance of the circuit is $\underline{Z} = 19.8 ~\Omega - {\rm j} \cdot 31.1 ~\Omega$.

Solution

1. Draw the circuit diagram of the given circuit.
Label all components, voltages, and currents.

Result

$$\begin{align*} Z &= {{\hat{U}}\over{\hat{I}}} \\ \hat{I} &= {{\hat{U}}\over{Z}} \\ \end{align*}$$

$$\begin{align*} Z_C &= {{1}\over{2\pi \cdot f \cdot C}}\\ &= {{1}\over{2\pi \cdot 15 ~{\rm kHz} \cdot 0.22 ~{\rm µF}}}\\ \end{align*}$$

With $I = {{1}\over{2\sqrt{2}}} \cdot \hat{I}$, it follows for I:

$$\begin{align*} I &= {{1}\over{\sqrt{2}}} \cdot {{\hat{U}}\over{Z}} \\ &= {{1}\over{\sqrt{2}}} \cdot {{30 ~{\rm V}}\over{19.28 ~\Omega}} \\ \end{align*}$$

$$\begin{align*} Z_L &= 2\pi \cdot f \cdot L \\ &= 2\pi \cdot 15 ~{\rm kHz} \cdot 0.22 ~{\rm µH}\\ \end{align*}$$

$$\begin{align*} Z_C &= {{1}\over{2\pi \cdot f \cdot C}}\\ &= {{1}\over{2\pi \cdot 15 ~{\rm kHz} \cdot 330 ~{\rm µH}}}\\ \end{align*}$$

$$\begin{align*} \underline{Z} &= R + \underline{Z}_L + \underline{Z}_C \\ &= R + j \cdot {Z}_L - j \cdot {Z}_C \\ &= R + j \cdot ({Z}_L - {Z}_C) \\ |\underline{Z}| &= \sqrt{R^2 + (\underline{Z}_L - \underline{Z}_C)^2 }\\ \end{align*}$$

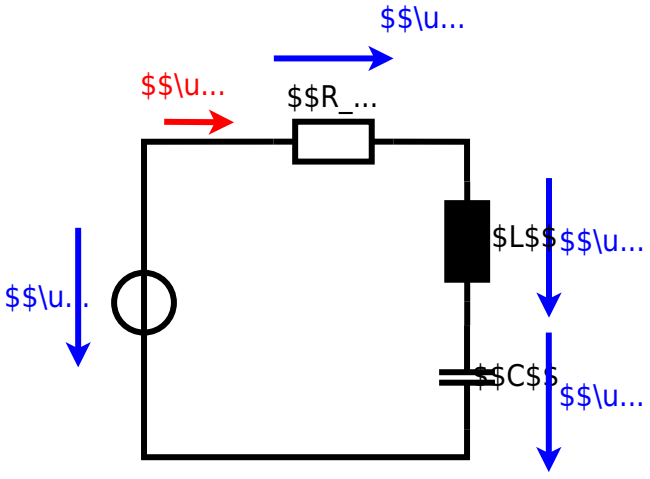
$$\u...
$$\u...
$$R_...
$L$$
$$\u...
$$\u...
$$C$$
$$\u...

'~~#@ee1_taskctr.#~~'

Exercise E3 Impedances at different Frequencies
(written test, approx. 18 % of a 60-minute written test, WS2022)

2. A BNC connector with a 50 Ω resistor is used to terminate the coaxial cable.
3. Calculate the current I_3 through R_3.
Result: $I_3 = 21.3 ~\rm mA$

Given a series circuit with a resistor $R_2=34.7 ~\Omega$ and a coil with the inductance $L_2=11.0 ~\rm mH$, which is connected to a voltage source with $U=5.00 ~\rm V$ and $f=450 ~\rm kHz$, which generates a current $I_2=60 ~\rm mA$.
A resistor R_1 shall have the same absolute value of the impedance as a capacitor $C_1=40 ~\rm nF$ at $f_1=4 ~\rm MHz$.

1. Calculate the resistance values of R_1 and R_2.

Solution

Solution

Solution

A series circuit means that the current is constant on every component.
The equivalent impedance for R and L combined is given by \begin{align*} {{\underline{U}}over{\underline{I}}} &= R_2 + \underline{X}_{L2} \\ &= R_2 + \mathrm{j} \cdot \omega L \end{align*} Since ${\mathrm{j}} \cdot \omega L$ is perpendicular to R_2 this can be simplified to: \begin{align*} \left| {{\underline{U}}over{\underline{I}}} \right|^2 &= |R_2|^2 + |\underline{X}_{L2}|^2 \\ \left({{U}over{I}} \right)^2 &= {R_2}^2 + {X_{L2}}^2 \\ \end{align*}
Therefore, the resulting current of the parallel circuit is given as: \begin{align*} \underline{I}_{3} &= \underline{I}_{3R} + \underline{I}_{3C} \\ |\underline{I}_{3}|^2 &= |\underline{I}_{3R}|^2 + |\underline{I}_{3C}|^2 \\ I_3^2 &= I_{3R}^2 + I_{3C}^2 \\ I_{3R} &= \sqrt{I_3^2 - I_{3C}^2} \\ I_{3R} &= \sqrt{\left(60~\rm mA \right)^2 - \left(2\pi \cdot 450~\rm kHz \cdot 4.7 ~\rm \mu H \right)^2} \\ \end{align*}
Parallel circuit means that the voltage is the same on R_3 and C_3. (It has to, since R_3 is perpendicular to ${\rm j}\cdot{X}_{3C}$ too)
This can be rearranged to get R_2: \begin{align*} R_2 &= \frac{U}{I_{3R}} \\ R_2 &= \frac{5~\rm V}{60~\rm mA} \\ \end{align*}
Back to the first formula: \begin{align*} R_3 \cdot {I}_{3R} &= {X}_{3C} \cdot {I}_{3C} \\ R_3 &= {X}_{3C} \cdot {{{I}_{3C}}\over{{I}_{3R}}} \\ &= {{1}\over{2\pi \cdot f \cdot C_3}} \cdot {{\sqrt{|{I}_{3}|^2 - |{I}_{3R}|^2}}\over{{I}_{3R}}} \\ \end{align*}

'~~#@ee1_taskctr.#~~'

Exercise E4 Resistance of a Wire by Resistivity
(written test, approx. 6 % of a 60-minute written test, WS2022)

4. The heating element is soldered to the wire with a round cross-section of $\varnothing=3.57 ~\rm mm$.
5. Calculate the current I needed to operate the heating element.
Result: $I = 16.8 ~\rm A$

A heating element is to be made of Nichrome wire with a diameter of $3.57 ~\rm mm$. For this purpose, a total power dissipation (= heat flow) of $P=40 ~\rm W$ is necessary.
Nichrome is a nickel-chromium alloy for heating elements.
The Nichrome wire has a resistivity of $1.10 \cdot 10^{-6} ~\Omega \rm m$.
The heating element is $3 ~\rm m$ long and has a diameter of $3.57 ~\rm mm$.

1. Calculate the resistance R of the heating element.

Solution

Solution

Solution

\begin{align*} R &= 1.10 \cdot 10^{-6} ~\Omega \rm m \cdot \frac{3~\rm m}{\pi \cdot \left(\frac{3.57~\rm mm}{2} \right)^2} \\ \end{align*}

Solution

$$\begin{align*} P = U \cdot I = R \cdot I^2 \quad \rightarrow \quad I= \sqrt{\frac{P}{R}} = \sqrt{\frac{40 ~\rm{W}}{0.33 ~\Omega}} \end{align*}$$

$$\begin{align*} R &= \rho \cdot \frac{l}{A} && | \text{with } A = r^2 \cdot \pi = \frac{1}{4} d^2 \cdot \pi \\ R &= \rho \cdot \frac{4 \cdot l}{d^2 \cdot \pi} && \\ R &= 1.10\cdot 10^{-6} ~\Omega \rm{m} \cdot \frac{4 \cdot 3~\rm{m}}{(3.57\cdot 10^{-3}~\rm{m})^2 \cdot \pi} && \\ \end{align*}$$

'~~#@ee1_taskctr.#~~'

Exercise E5 Charging Capacitors
(written test, approx. 16 % of a 60-minute written test, WS2022)

The switch S_2 to an additional consumer R_2 will be considered to be open for the first tasks. At the moment $t_0=0 ~\rm{s}$ the switch S_1 is closed. The voltage across the capacitor is again $0 ~\rm{V}$ at the moment $t_0=0 ~\rm{s}$ when the switch S_1 is closed. Calculate the voltage $u_c (t_2)$ across the capacitor at $t_2=1 ~\rm{ms}$ after closing the switch.

Solution

Hint: To solve this, first create an equivalent linear voltage source from U, R_1, and R_2.

$$\begin{align*} \Delta t &= t_2 - t_0 = 1~\rm{ms} - 0~\rm{s} = 1~\rm{ms} \end{align*}$$

Solution

$$\begin{align*} U_0 &= \frac{R_2}{R_1 + R_2} \cdot U = \frac{30~\Omega}{20~\Omega + 30~\Omega} \cdot 12~\rm{V} \\ &= \frac{3}{5} \cdot 12~\rm{V} \\ &= 7.2~\rm{V} \end{align*}$$

$$\begin{align*} R_i &= \frac{R_1 \cdot R_2}{R_1 + R_2} = \frac{20~\Omega \cdot 30~\Omega}{20~\Omega + 30~\Omega} \\ &= \frac{600~\Omega^2}{50~\Omega} \\ &= 12~\Omega \end{align*}$$

$$\begin{align*} \tau &= R_i \cdot C = 12~\Omega \cdot 100~\rm{\mu F} \\ &= 1200~\rm{\mu s} \\ &= 1.2~\rm{ms} \end{align*}$$

$$\begin{align*} u_c(t) &= U_0 \cdot \left(1 - e^{-\frac{t}{\tau}}\right) \\ u_c(t_2) &= 7.2~\rm{V} \cdot \left(1 - e^{-\frac{1~\rm{ms}}{1.2~\rm{ms}}}\right) \\ &= 7.2~\rm{V} \cdot \left(1 - e^{-0.833}\right) \\ &= 7.2~\rm{V} \cdot 0.565 \\ &= 4.07~\rm{V} \end{align*}$$

Solution

Using the Thevenin theorem, the ideal voltage source U provides the voltage of $U_0=7.2~\rm{V}$ independent of R_2.
On an alternative view, one can try to create an equivalent linear voltage source again. Then, the internal resistance is given by substituting the ideal voltage source is again short-circuiting R_2.

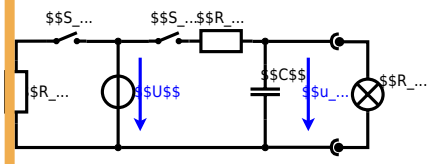

The circuit contains a voltage source $U=12 ~\rm{V}$, a switch S_1, a resistor of $R_1=20 ~\Omega$ and a capacitor of $C=100 ~\rm{\mu F}$.
The switch S_2 to an additional consumer R_2 will be considered to be open for the first tasks. At the moment $t_0=0 ~\rm{s}$ the switch S_1 is closed, the voltage across the capacitor is $u_c (t_0)=0 ~\rm{V}$.

1. First do not consider the light bulb – it is not connected to the RC circuit.
Calculate the point of time t_1 when $u_c (t_1)=0.5\cdot U$.

Solution

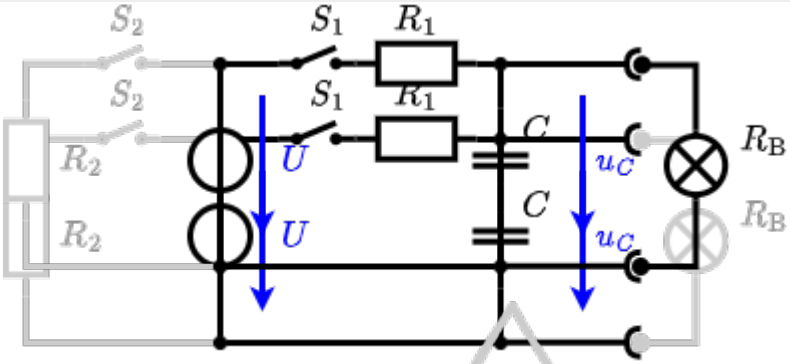

So, here only R_1 and C gives the time constant: $\tau = R_1 \cdot C$

The following formula describes the time course of $u_C(t)$ which has to be $u_c(t_1)=0.5\cdot U$: \begin{align*} u_c (t) = U \cdot (1- e^{t/\tau}) = 0.5\cdot U \end{align*} It has to be rearranged to t \begin{align*} (1- e^{t/\tau}) &= 0.5 \\ e^{t/\tau} &= 0.5 \\ t/\tau &= ln(0.5) \\ t &= \tau \cdot ln(0.5) \\ t &= R_1 \cdot C \cdot ln(0.5) \end{align*}

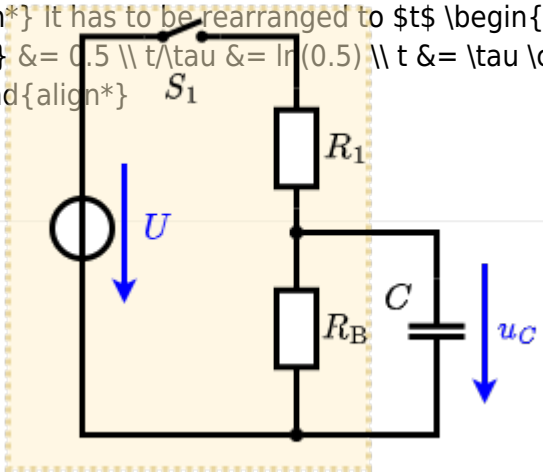

An equivalent linear voltage source can be given with U, R_1, and $R_\rm B$ as seen in yellow.
Therefore, the voltage of the equivalent linear voltage source is: $U_s = U \cdot {{R_\rm B}\over{R_1 + R_\rm B}} = 1/2 \cdot U$ The internal resistance is given by substituting the ideal voltage source with its resistance ($=0 ~\Omega$, short-circuit). \begin{align*} R_i &= R_1 || R_\rm B \\ &= 10 ~\Omega \end{align*}

\begin{align*} u_c (t_2) &= U_s \cdot (1- e^{t_2/(R_i\cdot C)}) \\ &= {{1}\over{2}} \cdot U \cdot (1- e^{1~\rm{ms}/(10 ~\Omega \cdot 100 ~\rm{µF})}) \end{align*}

'~~#@ee1_taskctr.#~~'

Exercise E6 Pure Resistor Network Simplification
(written test, approx. 13 % of a 60-minute written test, WS2022)

The following circuit with $R_1=200~\Omega$, $R_2=R_3=100~\Omega$ and U is given.

a) Calculate the equivalent resistance R_{eq} between the terminals A and B.

Result

$$R_{eq} = 150~\Omega$$

Solution

\begin{align*} R_{\rm eq} &= 133.33 ~\Omega \\ \end{align*}

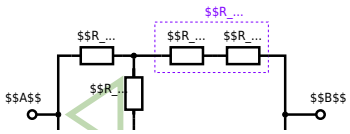

Since $R_2=R_3$ and based on the equations for the transformation, the transformed R_Y is given as: \begin{align*} R_{Y} &= {{R_2 \cdot R_2}\over{R_2 + R_2 + R_2}} \\ &= {{(100 ~\Omega)^2}\over{3 \cdot 100 ~\Omega}} \\ &= {{1}\over{3}} \cdot 100 ~\Omega = 33.33 ~\Omega \end{align*}

The equivalent resistor is given by a parallel configuration of resistors in series: \begin{align*} R_{\rm eq} &= R_Y + (R_Y + R_1 + R_1)||(R_Y + R_2)\\ R_{\rm eq} &= 33.33 ~\Omega + (33.33 ~\Omega + 400 ~\Omega)||(33.33 ~\Omega + 100 ~\Omega)\\ \end{align*}

1. The switch shall now be open. Calculate the equivalent resistance $R_{\rm eq}$ between $\rm A$ and $\rm B$.

Solution

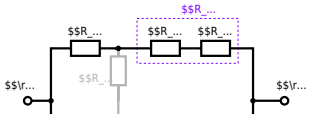

The equivalent resistor is given by a parallel configuration of resistors in series: \begin{align*} R_{\rm eq} &= (R_2 + R_1 + R_1)||(R_2 + R_2)\\ R_{\rm eq} &= (100 ~\Omega + 200 ~\Omega + 200 ~\Omega)&&||(100 ~\Omega + 100 ~\Omega) &&\\ R_{\rm eq} &= (500 ~\Omega)&&||(200 ~\Omega)&&\\ R_{\rm eq} &= {{500 ~\Omega \cdot 200 ~\Omega }\over{500 ~\Omega + 200 ~\Omega}}&&\\ \end{align*}

'~~#@ee1_taskctr.#~~'

Exercise E3 Equivalent linear Source
(written test, approx. 14 % of a 60-minute written test, WS2022)

The circuit in the following has to be simplified.
Result

\begin{align*} U_{\rm s} &= U_{\rm AB} &&= 4.5 ~\rm{V}\\ R_{\rm i} &= R_{\rm AB} &&= 6 ~\Omega \end{align*}

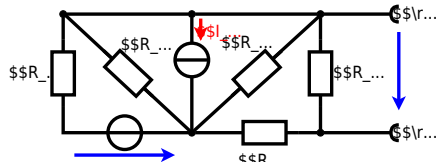

Calculated the internal resistance $R_\rm i$ and the source voltage $U_\rm s$ of an equivalent linear voltage source on the connectors $\rm A$ and $\rm B$. \begin{align*} R_1=5.0 ~\Omega, && U_2=6.0 ~\rm{V}, && R_3= 10 ~\Omega, \\ I_4=4.2 ~\rm{A}, && R_5=10 ~\Omega , && R_6=7.5 ~\Omega, \\ R_7=15 ~\Omega && && \end{align*} Use equivalent sources in order to simplify the circuit!

Solution

The best thing is to re-think the wiring like rubber bands and adjust them:

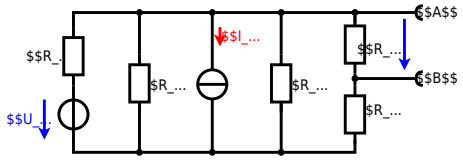

The linear voltage source of U_2 and R_1 can be transformed into a current source $I_2={{U_2}\over{R_1}}$ and R_1:

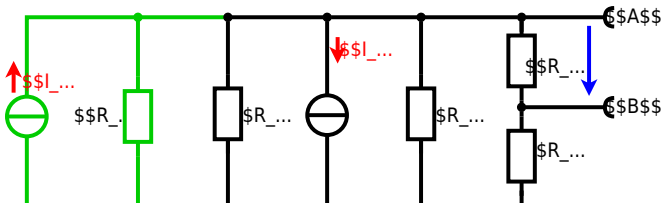

Now a lot of them can be combined. The resistors R_1, R_3, R_5 are in parallel, like also I_2 and I_4: \begin{align*} R_{135} &= R_1||R_3||R_5\\ I_{24} &= I_2 - I_4 = {{U_2}\over{R_1}} - I_4 \end{align*} The resulting circuit can again be transformed:

Here, the U_{24} is calculated by I_{24} as the following: \begin{align*} U_{24}

&= R_{135} \cdot I_{24} \\ &= ({{U_2}\over{R_1}} - I_4) \cdot R_1||R_3||R_5 \end{align*}

On the right side of the last circuit, there is a voltage divider given by R_{135}, R_6, and R_7.
Therefore the voltage between A and B is given as: \begin{align*} U_{\rm AB} &= U_{24} \cdot {{R_7}\over{R_6 + R_7 + R_1||R_3||R_5}} \\ &= ({{U_2}\over{R_1}} - I_4) \cdot {{R_7 \cdot R_1||R_3||R_5}\over{R_6 + R_7 + R_1||R_3||R_5}} \\ \end{align*}

For the internal resistance R_i the ideal voltage source is substituted by its resistance ($=0\Omega$, so a short-circuit): \begin{align*} R_{\rm AB} &= R_7 || (R_6 + R_1||R_3||R_5) \\ \end{align*}

with $R_1||R_3||R_5 = 5 ~\Omega || 10 ~\Omega || 10 ~\Omega = 5 ~\Omega || 5 ~\Omega = 2.5 ~\Omega$:

\begin{align*} U_{\rm AB} &= ({{6.0 ~\rm{V}}\over{5.0 ~\Omega}} - 4.2 ~\Omega) \cdot {{15 ~\Omega \cdot 2.5 ~\Omega}\over{7.5 ~\Omega + 15 ~\Omega + 2.5 ~\Omega}} \\ R_{\rm AB} &= 15 ~\Omega|| (7.5 ~\Omega + 2.5 ~\Omega) \\ \end{align*}

'~~#@ee1_taskctr.#~~'

Exercise E2 Temperature-dependent Resistance
(written test, approx. 6 % of a 60-minute written test, WS2022)

A thermistor has a temperature sensitive resistance. The thermistor has a resistance of $10 ~\Omega$ at $25 ~°\rm{C}$.
Its temperature coefficients are: $\alpha=0.01 ~{{1}\over{\rm{K}}}$ and $\beta=71 \cdot 10^{-6}~{{1}\over{\rm{K}^2}}$

1. Calculate the resistance of the thermistor at $-40 ~°\rm{C}$.
2. Additionally, explain whether a temperature sensitive resistor (PTC or NTC) should be used for a refrigeration system. Give an explanation for your answer.

Result

The temperature inside the refrigeration system can reach down to $-40 ~°\rm{C}$.

\begin{align*} R &= 6.5 ~\rm{k}\Omega \\ \end{align*}

The power of the resistor is $P=U\cdot I = R\cdot I^2 = {{U^2}\over{R}}$. Therefore, a resistor with a high heat flow up the refrigeration system.
Therefore, with constant U and increasing R the power decreases. Ten times more resistance decreases the heat flow to one-tenth.

Solution

\begin{align*} R &= R_0 \cdot (1 + \alpha \cdot \Delta T + \beta \cdot \Delta T^2) && | \text{with } \Delta T = T_{\rm end} - T_{\rm start}\\ R &= 10 ~\rm{k}\Omega \cdot \left(1 + 0.01 ~{{1}\over{\rm{K}}} \cdot (-40~°\rm{C} - 25~°\rm{C}) + 71 \cdot 10^{-6}~{{1}\over{\rm{K}^2}} \cdot (-40~°\rm{C} - 25~°\rm{C})^2 \right) \\ \end{align*}

'~~#@ee1_taskctr.#~~'

Exercise E5 Analyzing complex Impedances
(written test, approx. 14 % of a 60-minute written test, WS2022)

'~~#@ee1_taskctr.#~~'

Exercise E7 Complex Impedance Circuit
(written test, approx. 15 % of a 60-minute written test, WS2022)

Result

$$\begin{align*} Z &= {{\hat{U}}\over{\hat{I}}} \\ \hat{I} &= {{\hat{U}}\over{Z}} \\ \end{align*}$$

$$\begin{align*} Z_C &= {{1}\over{2\pi \cdot f \cdot C}}\\ &= {{1}\over{2\pi \cdot 15 ~{\rm kHz} \cdot 0.22 ~{\rm µF}}}\\ \end{align*}$$

With $I = {{1}\over{2\sqrt{2}}} \cdot \hat{I}$, it follows:

$$\begin{align*} I &= {{1}\over{\sqrt{2}}} \cdot {{\hat{U}}\over{Z}} \\ &= {{1}\over{\sqrt{2}}} \cdot {{230 ~{\rm V}}\over{19.28 ~\Omega}} \\ \end{align*}$$

$$\begin{align*} Z_L &= 2\pi \cdot f \cdot L \\ &= 2\pi \cdot 15 ~{\rm kHz} \cdot 0.22 ~{\rm µH}\\ \end{align*}$$

$$\begin{align*} Z_C &= {{1}\over{2\pi \cdot f \cdot C}}\\ &= {{1}\over{2\pi \cdot 15 ~{\rm kHz} \cdot 330 ~{\rm µH}}}\\ \end{align*}$$

$$\begin{align*} \underline{Z} &= R + \underline{Z}_L + \underline{Z}_C \\ &= R + j \cdot {Z}_L - j \cdot {Z}_C \\ &= R + j \cdot ({Z}_L - {Z}_C) \\ |\underline{Z}| &= \sqrt{R^2 + (\underline{Z}_L - \underline{Z}_C)^2 }\\ \end{align*}$$

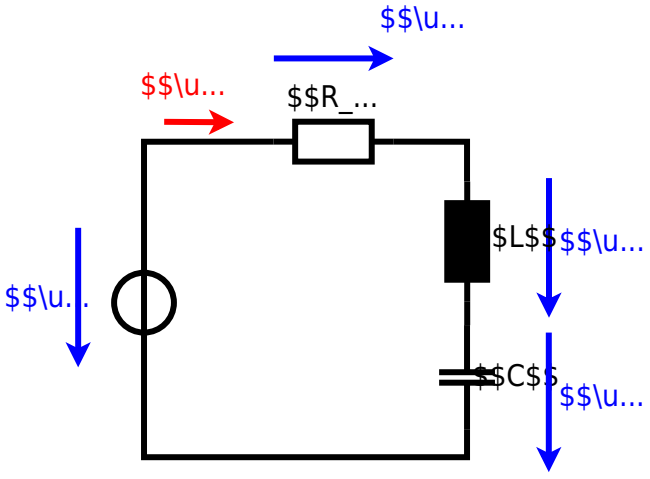
$$\u...
$$\u...
$$R_...
$L$$
$$\u...
$$\u...
$$C$$
$$\u...

'~~#@ee1_taskctr.#~~'

Exercise E6 Impedances at different Frequencies
(written test, approx. 18 % of a 60-minute written test, WS2022)

2. A BNC connector with a resistor value of $R_2=34.7 ~\Omega$ is used in an AC voltage source of $U_3=21.0 ~\rm V$, with a frequency of $f=450 ~\rm kHz$, which generates a current of $I_3=60 ~\rm mA$.
Result:
1. A resistor R_1 shall have the same absolute value of the impedance as a capacitor $C_1=40 ~{\rm nF}$ at $f_1=4 ~{\rm MHz}$.

Solution

Solution

Solution

A series circuit means that the current is constant on every component.
The equivalent impedance for R and L combined is given by \begin{align*}
Parallel circuit means that the voltage is the same on R_3 and C_3.
\begin{align*} R_1 &= \underline{X}_{C1} \\ &= {{1}\over{2\pi \cdot f \cdot C_1}}
\\ &= {{1}\over{2\pi \cdot 4 ~{\rm MHz} \cdot 40 ~{\rm nF}}} \\ \end{align*}
$\underline{I}_{3R}$ is perpendicular to $\underline{I}_{3C}$ (It has to, since R_3 is perpendicular to $ {\rm j} \cdot {X}_{3C}$ too).
Therefore, the resulting current of the parallel circuit is given as: \begin{align*}
\underline{I}_{3} &= \underline{I}_{3R} + \underline{I}_{3C} \\
|\underline{I}_{3}|^2 &= |\underline{I}_{3R}|^2 + |\underline{I}_{3C}|^2 \\
|\underline{I}_{3R}| &= \sqrt{|\underline{I}_{3}|^2 - |\underline{I}_{3C}|^2} \\
|\underline{I}_{3R}| &= \sqrt{\left|{{U_3}\over{R_3}}\right|^2 - \left|{{U_3}\over{{\rm j} \cdot X_{3C}}}\right|^2} \\
|\underline{I}_{3R}| &= \sqrt{\left({{21~\rm V}\over{60~\rm mA}}\right)^2 - \left({{21~\rm V}\over{-{\rm j} \cdot 2\pi \cdot 450~{\rm kHz} \cdot 4.7 ~ {\rm µH}}}\right)^2} \\ \end{align*}
Back to the first formula: \begin{align*} R_3 \cdot \underline{I}_{3R} &= \underline{X}_{3C} \cdot \underline{I}_{3C} \\ R_3 &= \underline{X}_{3C} \cdot {{\underline{I}_{3C}}\over{\underline{I}_{3R}}} \\ &= {{1}\over{2\pi \cdot f \cdot C_3}} \cdot {{\sqrt{|\underline{I}_{3}|^2 - |\underline{I}_{3R}|^2}}\over{\underline{I}_{3R}}} \\ \end{align*}

'~~#@ee1_taskctr.#~~'

Exercise E1 Resistance of a Wire by Resistivity
(written test, approx. 6 % of a 60-minute written test, WS2022)

A heating element is to be made of Nichrome wire with a round cross-section. Electric power dissipation (= heat flow) of $P=40 ~\rm{W}$ is necessary.
Calculate the current I needed to operate it.
Nichrome is a nickel-chromium alloy for heating elements.
The Nichrome wire has a resistivity of $1.10\cdot 10^{-6} ~\Omega \rm{m}$.
The heating element is $3 ~\rm{m}$ long and has a diameter of $3.57 ~\rm{mm}$.
1. Calculate the resistance R of the heating element.

Solution

Solution

Solution

$$\begin{align*} P = U \cdot I = R \cdot I^2 \quad \rightarrow \quad I= \sqrt{\frac{P}{R}} = \sqrt{\frac{40 ~\rm{W}}{0.33 ~\Omega}} \end{align*}$$

$$\begin{align*} R &= \rho \cdot \frac{l}{A} && | \text{with } A = r^2 \cdot \pi = \frac{1}{4} d^2 \cdot \pi \\ R &= \rho \cdot \frac{4 \cdot l}{d^2 \cdot \pi} && \\ R &= 1.10\cdot 10^{-6} ~\Omega \rm{m} \cdot \frac{4 \cdot 3~\rm{m}}{(3.57\cdot 10^{-3}~\rm{m})^2 \cdot \pi} && \\ \end{align*}$$

'~~#@ee1_taskctr.#~~'

Exercise E4 Charging Capacitors
(written test, approx. 16 % of a 60-minute written test, WS2022)

The switch S_2 to an additional consumer R_2 will be considered to be open for the first tasks. At the moment $t_0=0 ~\rm{s}$ the switch S_1 is closed. The voltage across the capacitor is again $0 ~\rm{V}$ at the moment $t_0=0 ~\rm{s}$ when the switch S_1 is closed. Calculate the voltage $u_c (t_2)$ across the capacitor at $t_2=1 ~\rm{ms}$ after closing the switch.

Solution

Hint: To solve this, first create an equivalent linear voltage source from U, R_1, and R_2.

$$\begin{align*} \Delta t_{2} &= t_2 - t_0 = 1~\rm{ms} - 0~\rm{s} \\ &= 1~\rm{ms} \end{align*}$$

Solution

$$\begin{align*} U_{eq} &= U_2 = U_1 \cdot \frac{R_2}{R_1 + R_2} \\ &= 12~\rm{V} \cdot \frac{100~\Omega}{20~\Omega + 100~\Omega} \\ &= 10~\rm{V} \end{align*}$$

$$\begin{align*} R_{eq} &= R_1 \parallel R_2 = \frac{R_1 \cdot R_2}{R_1 + R_2} \\ &= \frac{20~\Omega \cdot 100~\Omega}{20~\Omega + 100~\Omega} \\ &= 16.67~\Omega \end{align*}$$

$$\begin{align*} \tau &= R_{eq} \cdot C \\ &= 16.67~\Omega \cdot 100~\rm{\mu F} \\ &= 1.67~\rm{ms} \end{align*}$$

$$\begin{align*} u_c(t_2) &= U_{eq} \cdot \left(1 - e^{-\frac{\Delta t_2}{\tau}}\right) \\ &= 10~\rm{V} \cdot \left(1 - e^{-\frac{1~\rm{ms}}{1.67~\rm{ms}}}\right) \\ &= 4.51~\rm{V} \end{align*}$$

Solution

Using the Thevenin theorem, the ideal voltage source U_2 provides the voltage of $U_1=12 ~\rm{V}$ independent of this resistor.
On an alternative view, one can try to create an equivalent linear voltage source again. Then, the internal resistance is given by substituting the ideal voltage source is again short-circuiting R_2.

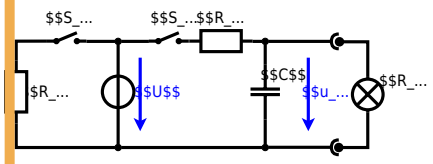

The circuit contains a voltage source $U=12 ~\rm{V}$, a switch S_1, a resistor of $R_1=20 ~\Omega$ and a capacitor of $C=100 ~\rm{\mu F}$.
The switch S_2 to an additional consumer R_2 will be considered to be open for the first tasks. At the moment $t_0=0 ~\rm{s}$ the switch S_1 is closed, the voltage across the capacitor is $u_c (t_0)=0 ~\rm{V}$.

1. First do not consider the light bulb – it is not connected to the RC circuit.
Calculate the point of time t_1 when $u_c (t_1)=0.5\cdot U$.

Solution

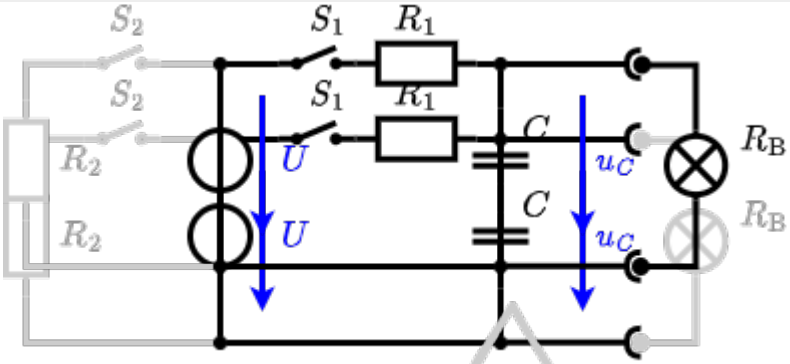

So, here only R_1 and C gives the time constant: $\tau = R_1 \cdot C$

The following formula describes the time course of $u_C(t)$ which has to be $u_c (t_1)=0.5\cdot U$: \begin{align*} u_c (t) = U \cdot (1- e^{t/\tau}) = 0.5\cdot U \end{align*} It has to be rearranged to t \begin{align*} (1- e^{t/\tau}) &= 0.5 \\ e^{t/\tau} &= 0.5 \\ t/\tau &= ln(0.5) \\ t &= \tau \cdot ln(0.5) \\ t &= R_1 \cdot C \cdot ln(0.5) \end{align*}

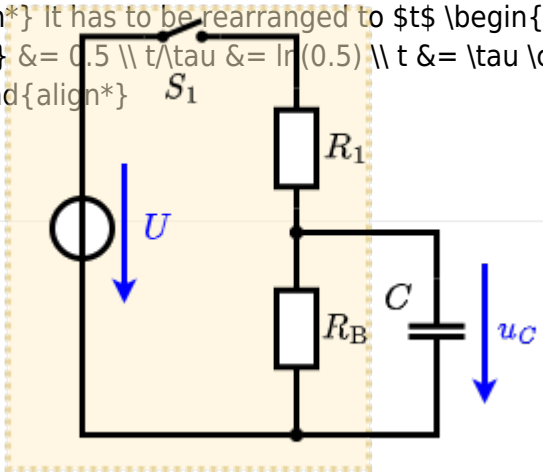

An equivalent linear voltage source can be given with U, R_1, and $R_\rm B$ as seen in yellow.
Therefore, the voltage of the equivalent linear voltage source is: $U_s = U \cdot {{R_\rm B}\over{R_1 + R_\rm B}} = 1/2 \cdot U$ The internal resistance is given by substituting the ideal voltage source with its resistance ($=0 ~\Omega$, short-circuit). \begin{align*} R_i &= R_1 || R_\rm B \\ &= 10 ~\Omega \end{align*}

\begin{align*} u_c (t_2) &= U_s \cdot (1- e^{t_2/(R_i\cdot C)}) \\ &= {{1}\over{2}} \cdot U \cdot (1- e^{1~\rm{ms}/(10 ~\Omega \cdot 100 ~\rm{µF})}) \end{align*}

'~~#@ee1_taskctr.#~~'

Exercise E3 Pure Resistor Network Simplification
(written test, approx. 13 % of a 60-minute written test, WS2022)

2. The following circuit with $R_1=200 ~\Omega$, $R_2=R_3=100 ~\Omega$ and the switch S is given.

Result

Solution

\begin{align*} R_{\rm eq} &= 133.33 ~\Omega \\ \end{align*}

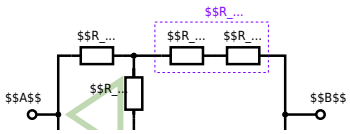

Since $R_2=R_3$ and based on the equations for the transformation, the transformed R_Y is given as: \begin{align*} R_{Y} &= {{R_2 \cdot R_2}\over{R_2 + R_2 + R_2}} \\ &= {{(100 ~\Omega)^2}\over{3 \cdot 100 ~\Omega}} \\ &= {{1}\over{3}} \cdot 100 ~\Omega = 33.33 ~\Omega \end{align*}

The equivalent resistor is given by a parallel configuration of resistors in series: \begin{align*} R_{\rm eq} &= R_Y + (R_Y + R_1 + R_1)||(R_Y + R_2)\\ R_{\rm eq} &= 33.33 ~\Omega + (33.33 ~\Omega + 400 ~\Omega)||(33.33 ~\Omega + 100 ~\Omega)\\ \end{align*}

1. The switch shall now be open. Calculate the equivalent resistance $R_{\rm eq}$ between $\rm A$ and $\rm B$.

Solution

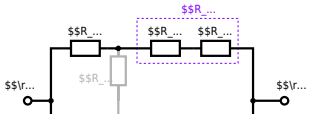

The equivalent resistor is given by a parallel configuration of resistors in series: \begin{align*} R_{\rm eq} &= (R_2 + R_1 + R_1)||(R_2 + R_2)\\ R_{\rm eq} &= (100 ~\Omega + 200 ~\Omega + 200 ~\Omega)&&||(100 ~\Omega + 100 ~\Omega) &&\\ R_{\rm eq} &= (500 ~\Omega)&&||(200 ~\Omega)&&\\ R_{\rm eq} &= {{500 ~\Omega \cdot 200 ~\Omega }\over{500 ~\Omega + 200 ~\Omega}}&&\\ \end{align*}

From:
https://mexle.te.hs-heilbronn.de/ - **MEXLE Wiki**

Permanent link:
https://mexle.te.hs-heilbronn.de/electrical_engineering_1/ws2022_exam?rev=1678504916

Last update: **2023/03/11 04:21**