Exam Winter Semester 2022

Student Group

First Name	Surname	Matrikel Nr.

Table of Contents

Exam Winter Semester 2022 3
Additional permitted Aids 3
Hits 3
Tasks 3
Exercise E4 Resistance of a Wire by Resistivity (written test, approx. 6 % of a 60-minute written test, WS2022) 3
Exercise E1 Resistance of a Wire by Resistivity (written test, approx. 6 % of a 60-minute written test, WS2022) 3
Exercise E1 Temperature-dependent Resistance (written test, approx. 6 % of a 60-minute written test, WS2022) 4
Exercise E2 Temperature-dependent Resistance (written test, approx. 6 % of a 60-minute written test, WS2022) 4
Exercise E6 Pure Resistor Network Simplification (written test, approx. 13 % of a 60-minute written test, WS2022) 5
Exercise E3 Pure Resistor Network Simplification (written test, approx. 13 % of a 60-minute written test, WS2022) 7
Exercise E1 Equivalent linear Source (written test, approx. 14 % of a 60-minute written test, WS2022) 9
Exercise E3 Equivalent linear Source (written test, approx. 14 % of a 60-minute written test, WS2022) 13
Exercise E5 Charging Capacitors (written test, approx. 16 % of a 60-minute written test, WS2022) 17
Exercise E4 Charging Capacitors (written test, approx. 16 % of a 60-minute written test, WS2022) 18
Exercise E2 Analyzing complex Impedances (written test, approx. 14 % of a 60-minute written test, WS2022) 20
Exercise E5 Analyzing complex Impedances (written test, approx. 14 % of a 60-minute written test, WS2022) 20
Exercise E3 Impedances at different Frequencies (written test, approx. 18 % of a 60-minute

written test, WS2022) 21
Exercise E6 Impedances at different Frequencies (written test, approx. 18 % of a 60-minute written test, WS2022) 21
Exercise E1 Complex Impedance Circuit (written test, approx. 15 % of a 60-minute written test, WS2022) 22
Exercise E7 Complex Impedance Circuit (written test, approx. 15 % of a 60-minute written test, WS2022) 25

Exam Winter Semester 2022

Additional permitted Aids

- non-programmable calculator,
- formulary (2 DIN A4 pages)

Hits

- The duration of the exam is 60 min.
- Attempts to cheat will lead to exclusion and failure of the exam.
- Withdrawal is no longer possible after these exam has been handed out.
- Please write down intermediate calculations and results on the assignment sheet. (when more space is needed also on the reverse side. In this case: Mark it clearly).
- Always use units in the calculation.
- Use a document-proof, non-red pen.

Tasks

Exercise E4 Resistance of a Wire by Resistivity
(written test, approx. 6 % of a 60-minute written test, WS2022)

A heating element made of a Nichrome wire with a round cross-section is used in an electric oven. A power dissipation (= heat flow) of $P=40 ~\rm{W}$ is necessary.
Nichrome is a common Nickel-Chrome alloy for heating elements.
The Nichrome wire has a resistivity of $1.10\cdot 10^{-6} ~\Omega \rm{m}$.
The heating element is $3 ~\rm{m}$ long and has a diameter of $3.57 ~\rm{mm}$.
1. Calculate the resistance R of the heating element.

Result

Solution

$$\begin{align*} P = U \cdot I = R \cdot I^2 \quad \rightarrow \quad I= \sqrt{\frac{P}{R}} = \sqrt{\frac{40 ~\rm{W}}{0.33 ~\Omega}} \end{align*}$$

$$\begin{align*} R &= \rho \cdot \frac{l}{A} && | \text{with } A = r^2 \cdot \pi = \frac{1}{4} d^2 \cdot \pi \\ R &= \rho \cdot \frac{4 \cdot l}{d^2 \cdot \pi} && \\ R &= 1.10\cdot 10^{-6} ~\Omega \rm{m} \cdot \frac{4 \cdot 3~\rm{m}}{(3.57\cdot 10^{-3}~\rm{m})^2 \cdot \pi} && \\ \end{align*}$$

Exercise E1 Resistance of a Wire by Resistivity
(written test, approx. 6 % of a 60-minute written test, WS2022)

A heating element made of a Nichrome wire with a round cross-section is used in an electric

Result
Calculate the current I needed to operate the heating elements.
The Nichrome wire has a resistivity of $1.10\cdot 10^{-6} ~\Omega \rm{m}$.
The heating element is $3 ~\rm{m}$ long and has a diameter of $3.57 ~\rm{mm}$.
2. Calculate the resistance R of the heating element.

Solution
\begin{align*} P = U \cdot I = R \cdot I^2 \quad \rightarrow \quad I= \sqrt{\frac{P}{R}} = \sqrt{\frac{40 ~\rm{W}}{0.33 ~\Omega}} \end{align*}

\begin{align*} R &= \rho \cdot \frac{l}{A} && | \text{with } A = r^2 \cdot \pi = \frac{1}{4} d^2 \cdot \pi \\ R &= \rho \cdot \frac{4 \cdot l}{d^2 \cdot \pi} && \\ R &= 1.10\cdot 10^{-6} ~\Omega \rm{m} \cdot \frac{4 \cdot 3~\rm{m}}{(3.57\cdot 10^{-3}~\rm{m})^2 \cdot \pi} && \\ \end{align*}

Exercise E1 Temperature-dependent Resistance (written test, approx. 6 % of a 60-minute written test, WS2022)

A. Explain why a temperature sensor is required in a refrigeration system. The thermistor has a resistance of $10 ~\Omega$ at $25 ~°\rm{C}$.
Its temperature coefficients are: $\alpha=0.01 ~{{1}\over{\rm{K}}}$ and $\beta=71 \cdot 10^{-6}~{{1}\over{\rm{K}^2}}$
Result
The temperature inside the refrigeration system can reach down to $-40 ~°\rm{C}$.
1. Calculate the resistance of the thermistor at $-40 ~°\rm{C}$.

Solution
The power of the resistor $P=U\cdot I = R \cdot I^2 = {U^2}\over{R}$ is equivalent to the heat flow.
Therefore, with constant U and increasing R the power decreases. Ten times more resistance decreases the heat flow to one-tenth.

\begin{align*} R &= R_0 \cdot (1 + \alpha \cdot \Delta T + \beta \cdot \Delta T^2) && | \text{with } \Delta T = T_{\rm end} - T_{\rm start}\\ R &= 10 ~\rm{k}\Omega \cdot \left(1 + 0.01 ~{{1}\over{\rm{K}}} \cdot (-40~°\rm{C} - 25~°\rm{C}) + 71 \cdot 10^{-6}~{{1}\over{\rm{K}^2}} \cdot (-40~°\rm{C} - 25~°\rm{C})^2 \right) \\ \end{align*}

Exercise E2 Temperature-dependent Resistance

(written test, approx. 6 % of a 60-minute written test, WS2022)

A thermistor is used in a temperature sensor in a refrigeration system. The thermistor has a resistance of $10 ~\rm{k}\Omega$ at $+25 ~°\rm{C}$.

Result

Its temperature coefficients are: $\alpha=0.01 ~{{1}\over{\rm{K}}}$ and $\beta=71 \cdot 10^{-6}~{{1}\over{\rm{K}^2}}$

The temperature inside the refrigeration system can reach down to $-40 ~°\rm{C}$.

1. Calculate the resistance of the thermistor at $-40 ~°\rm{C}$.

Result

\begin{align*} R &= 6.5 ~\rm{k}\Omega \\ \end{align*}

Solution

The power of the resistor $P = U \cdot I = R \cdot I^2 = {{U^2}\over{R}}$ is equivalent to the heat flow.

Therefore, with constant U and increasing R the power decreases. Ten times more resistance decreases the heat flow to one-tenth.

\begin{align*} R &= R_0 \cdot (1 + \alpha \cdot \Delta T + \beta \cdot \Delta T^2) && | \text{with } \Delta T = T_{\rm end} - T_{\rm start}\\ R &= 10 ~\rm{k}\Omega \cdot \left(1 + 0.01 ~{{1}\over{\rm{K}}} \cdot (-40~°\rm{C} - 25~°\rm{C}) + 71 \cdot 10^{-6}~{{1}\over{\rm{K}^2}} \cdot (-40~°\rm{C} - 25~°\rm{C})^2 \right) \\ \end{align*}

Exercise E6 Pure Resistor Network Simplification
(written test, approx. 13 % of a 60-minute written test, WS2022)

The following circuit with $R_1=200 ~\Omega$, $R_2=R_3=100 ~\Omega$ and the switch S is given.

Result

Solution

\begin{align*} R_{\rm eq} &= 142.8 ~\Omega \\ \end{align*}

Now a wye-delta transformation is necessary.

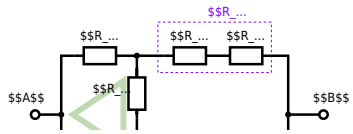

Since $R_2=R_3$ and based on the equations for the transformation, the transformed R_Y is given as: \begin{align*} R_{Y} &= {{R_2 \cdot R_2}\over{R_2 + R_2 + R_2}} \\ &= {{(100 ~\Omega)^2}\over{3 \cdot 100 ~\Omega}} \\ &= {{1}\over{3}} \cdot 100 ~\Omega = 33.33 ~\Omega \end{align*}

The equivalent resistor is given by a parallel configuration of resistors in series: \begin{align*} R_{\rm eq} &= R_Y + (R_Y + R_1 + R_1)||(R_Y + R_2)\\ R_{\rm eq} &= 33.33 ~\Omega + (33.33 ~\Omega + 400 ~\Omega)||(33.33 ~\Omega + 100 ~\Omega)\\ \end{align*}

1. The switch shall now be open. Calculate the equivalent resistance $R_{\rm eq}$ between $\rm A$ and $\rm B$.

Solution

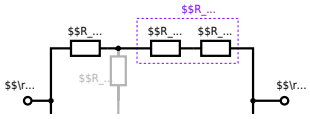

The equivalent resistor is given by a parallel configuration of resistors in series: \begin{align*} R_{\rm eq} &= (R_2 + R_1 + R_1)||(R_2 + R_2)\\ R_{\rm eq} &= (100 ~\Omega + 200 ~\Omega + 200 ~\Omega)&&||(100 ~\Omega + 100 ~\Omega) &&\\ R_{\rm eq} &= (500 ~\Omega)&&||(200 ~\Omega)&&\\ R_{\rm eq} &= {{500 ~\Omega \cdot 200 ~\Omega }\over{500 ~\Omega + 200 ~\Omega}}&&\\ \end{align*}

Exercise E3 Pure Resistor Network Simplification
(written test, approx. 13 % of a 60-minute written test, WS2022)

The following circuit with $R_1=200 ~\Omega$, $R_2=R_3=100 ~\Omega$ and the switch S is given.

2. Calculate the equivalent resistance $R_{\rm eq}$ between $\rm A$ and $\rm B$.

Result

Solution

\begin{align*} R_{\rm eq} &= 142.8 ~\Omega \\ \end{align*}

Now a wye-delta transformation is necessary.

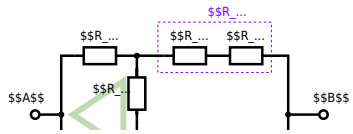

Since $R_2=R_3$ and based on the equations for the transformation, the transformed R_Y is given as: \begin{align*} R_{Y} &= {{R_2 \cdot R_2}\over{R_2 + R_2 + R_2}} \\ &= {{(100 ~\Omega)^2}\over{3 \cdot 100 ~\Omega}} \\ &= {{1}\over{3}} \cdot 100 ~\Omega = 33.33 ~\Omega \end{align*}

The equivalent resistor is given by a parallel configuration of resistors in series: \begin{align*} R_{\rm eq} &= R_Y + (R_Y + R_1 + R_1)||(R_Y + R_2)\\ R_{\rm eq} &= 33.33 ~\Omega + (33.33 ~\Omega + 400 ~\Omega)||(33.33 ~\Omega + 100 ~\Omega)\\ \end{align*}

1. The switch shall now be open. Calculate the equivalent resistance $R_{\rm eq}$ between $\rm A$ and $\rm B$.

Solution

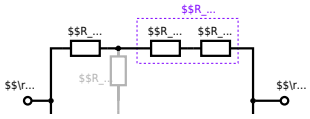

The equivalent resistor is given by a parallel configuration of resistors in series:
\begin{align*} R_{\rm eq} &= (R_2 + R_1 + R_1)||(R_2 + R_2)\\ R_{\rm eq} &= (100 ~\Omega + 200 ~\Omega + 200 ~\Omega)&&||(100 ~\Omega + 100 ~\Omega) &&\\ R_{\rm eq} &= (500 ~\Omega)&&||(200 ~\Omega)&&\\ R_{\rm eq} &= {{500 ~\Omega \cdot 200 ~\Omega }\over{500 ~\Omega + 200 ~\Omega}}&&\\ \end{align*}

Exercise E1 Equivalent linear Source
(written test, approx. 14 % of a 60-minute written test, WS2022)

The circuit in the following has to be simplified.
Result

\begin{align*} U_{\rm s} &= U_{\rm AB} &&= 4.5 ~\rm{V}\\ R_{\rm i} &= R_{\rm AB} &&= 6 ~\Omega \end{align*}

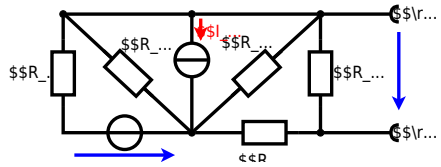

Calculated the internal resistance $R_\rm i$ and the source voltage $U_\rm s$ of an equivalent linear voltage source on the connectors $\rm A$ and $\rm B$. \begin{align*} R_1=5.0 ~\Omega, && U_2=6.0 ~\rm{V}, && R_3= 10 ~\Omega, \\ I_4=4.2 ~\rm{A}, && R_5=10 ~\Omega , && R_6=7.5 ~\Omega, \\ R_7=15 ~\Omega && && \end{align*} Use equivalent sources in order to simplify the circuit!

Solution

The best thing is to re-think the wiring like rubber bands and adjust them:

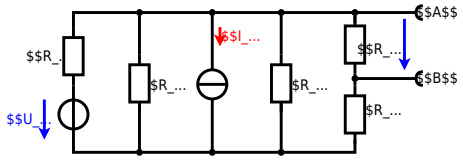

The linear voltage source of U_2 and R_1 can be transformed into a current source $I_2={{U_2}\over{R_1}}$ and R_1:

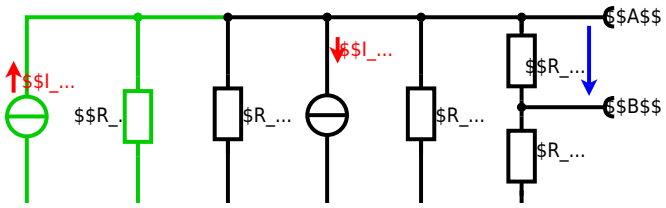

Now a lot of them can be combined. The resistors R_1, R_3, R_5 are in parallel, like also I_2 and I_4: \begin{align*} R_{135} &= R_1||R_3||R_5\\ I_{24} &= I_2 - I_4 = {{U_2}\over{R_1}} - I_4 \end{align*} The resulting circuit can again be transformed:

Here, the U_{24} is calculated by I_{24} as the following: \begin{align*} U_{24}

&= R_{135} \cdot I_{24} \\ &= ({{U_2}\over{R_1}} - I_4) \cdot R_1||R_3||R_5 \end{align*}

On the right side of the last circuit, there is a voltage divider given by R_{135}, R_6, and R_7.
Therefore the voltage between A and B is given as: \begin{align*} U_{\rm AB} &= U_{24} \cdot {{R_7}\over{R_6 + R_7 + R_1||R_3||R_5}} \\ &= ({{U_2}\over{R_1}} - I_4) \cdot {{R_7 \cdot R_1||R_3||R_5}\over{R_6 + R_7 + R_1||R_3||R_5}} \\ \end{align*}

For the internal resistance R_i the ideal voltage source is substituted by its resistance ($=0\Omega$, so a short-circuit): \begin{align*} R_{\rm AB} &= R_7 || (R_6 + R_1||R_3||R_5) \\ \end{align*}

with $R_1||R_3||R_5 = 5 ~\Omega || 10 ~\Omega || 10 ~\Omega = 5 ~\Omega || 5 ~\Omega = 2.5 ~\Omega$:

\begin{align*} U_{\rm AB} &= ({{6.0 ~\rm{V}}\over{5.0 ~\Omega}} - 4.2 ~\Omega) \cdot {{15 ~\Omega \cdot 2.5 ~\Omega}\over{7.5 ~\Omega + 15 ~\Omega + 2.5 ~\Omega}} \\ R_{\rm AB} &= 15 ~\Omega|| (7.5 ~\Omega + 2.5 ~\Omega) \\ \end{align*}

Exercise E3 Equivalent linear Source
(written test, approx. 14 % of a 60-minute written test, WS2022)

The circuit in the following has to be simplified.
Result

\begin{align*} U_{\rm s} &= U_{\rm AB} &&= 4.5 ~\rm{V}\\ R_{\rm i} &= R_{\rm AB} &&= 6 ~\Omega \end{align*}

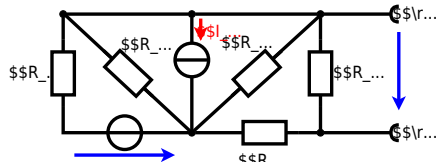

Calculated the internal resistance $R_\rm i$ and the source voltage $U_\rm s$ of an equivalent linear voltage source on the connectors $\rm A$ and $\rm B$. \begin{align*} R_1=5.0 ~\Omega, && U_2=6.0 ~\rm{V}, && R_3= 10 ~\Omega, \\ I_4=4.2 ~\rm{A}, && R_5=10 ~\Omega , && R_6=7.5 ~\Omega, \\ R_7=15 ~\Omega && && \end{align*} Use equivalent sources in order to simplify the circuit!

Solution

The best thing is to re-think the wiring like rubber bands and adjust them:

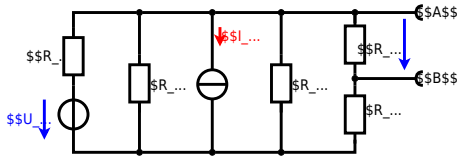

The linear voltage source of U_2 and R_1 can be transformed into a current source $I_2={{U_2}\over{R_1}}$ and R_1:

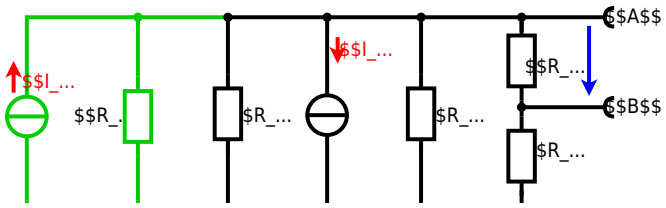

Now a lot of them can be combined. The resistors R_1, R_3, R_5 are in parallel, like also I_2 and I_4: \begin{align*} R_{135} &= R_1||R_3||R_5\\ I_{24} &= I_2 - I_4 = {{U_2}\over{R_1}} - I_4 \end{align*} The resulting circuit can again be transformed:

Here, the U_{24} is calculated by I_{24} as the following: \begin{align*} U_{24}

&= R_{135} \cdot I_{24} \\ &= ({{U_2}\over{R_1}} - I_4) \cdot R_1||R_3||R_5 \end{align*}

On the right side of the last circuit, there is a voltage divider given by R_{135}, R_6, and R_7.
Therefore the voltage between A and B is given as: \begin{align*} U_{\rm AB} &= U_{24} \cdot {{R_7}\over{R_6 + R_7 + R_1||R_3||R_5}} \\ &= ({{U_2}\over{R_1}} - I_4) \cdot {{R_7 \cdot R_1||R_3||R_5}\over{R_6 + R_7 + R_1||R_3||R_5}} \\ \end{align*}

For the internal resistance R_i the ideal voltage source is substituted by its resistance ($=0\Omega$, so a short-circuit): \begin{align*} R_{\rm AB} &= R_7 || (R_6 + R_1||R_3||R_5) \\ \end{align*}

with $R_1||R_3||R_5 = 5 ~\Omega || 10 ~\Omega || 10 ~\Omega = 5 ~\Omega || 5 ~\Omega = 2.5 ~\Omega$:

\begin{align*} U_{\rm AB} &= ({{6.0 ~\rm{V}}\over{5.0 ~\Omega}} - 4.2 ~\Omega) \cdot {{15 ~\Omega \cdot 2.5 ~\Omega}\over{7.5 ~\Omega + 15 ~\Omega + 2.5 ~\Omega}} \\ R_{\rm AB} &= 15 ~\Omega|| (7.5 ~\Omega + 2.5 ~\Omega) \\ \end{align*}

Exercise E5 Charging Capacitors
(written test, approx. 16 % of a 60-minute written test, WS2022)

4. [illegible] S_2 is closed [illegible] S_2 is open. The voltage across the capacitor is again $0 ~\rm{V}$ at the moment $t_0=0 ~\rm{s}$ when the switch S_1 is closed. Calculate the voltage $u_c (t_2)$ across the capacitor at $t_2=1 ~\rm{ms}$ after closing the switch.

Result

Hint: To solve this, first create an equivalent linear voltage source from U, R_1, and $R_\rm B$.

Solution

Solution

\begin{align*} \Delta W_R &= \Delta W_C \\ &= {{1}\over{2}} \cdot C \cdot U^2 \\ &= {{1}\over{2}} \cdot 100 ~\rm{µF} \cdot (12 ~\rm{V})^2 \end{align*}

Using an alternative view, one can try to create an equivalent linear voltage source again. Then, the internal resistance is given by substituting the ideal voltage source is again short-circuiting R_2.

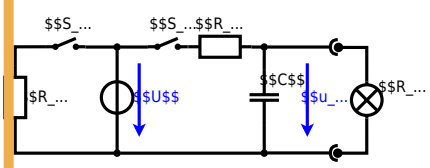

The circuit contains a voltage source $U=12 ~\rm{V}$, a switch S_1, a resistor of $R_1=20 ~\Omega$ and a capacitor of $C=100 ~\rm{µF}$.
The switch S_2 to an additional consumer R_2 will be considered to be open for the first task. At the moment $t_0=0 ~\rm{s}$ the switch S_1 is closed, the voltage across the capacitor is $u_c (t_0)=0 ~\rm{V}$.

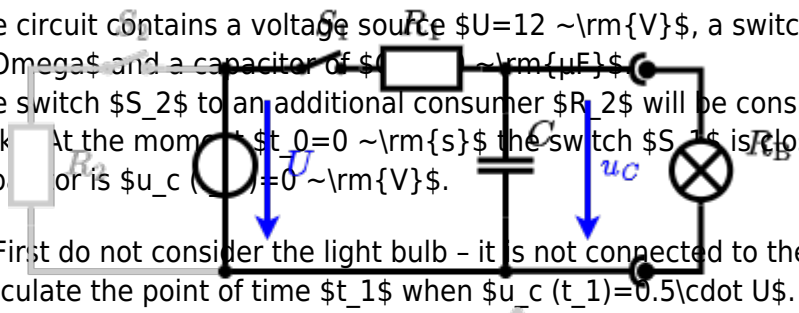

1. First do not consider the light bulb – it is not connected to the RC circuit.
Calculate the point of time t_1 when $u_c (t_1)=0.5\cdot U$.

Solution

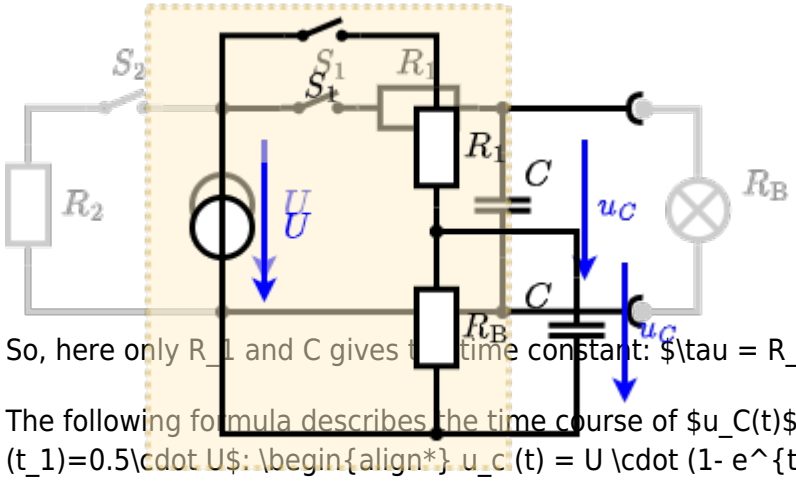

So, here only R_1 and C gives the time constant: $\tau = R_1 \cdot C$

The following formula describes the time course of $u_C(t)$ which has to be $u_c (t_1)=0.5\cdot U$: \begin{align*} u_c (t) = U \cdot (1- e^{t/\tau}) = 0.5\cdot U \end{align*} It has to be rearranged to t \begin{align*} (1- e^{t/\tau}) &= 0.5 \\ e^{t/\tau} &= 0.5 \\ t/\tau &= ln(0.5) \\ t &= \tau \cdot ln(0.5) \\ t &= R_1 \cdot C \cdot ln(0.5) \end{align*}

An equivalent linear voltage source can be given with U, R_1, and $R_\rm B$ as seen in yellow.

Therefore, the voltage of the equivalent linear voltage source is: $U_s = U \cdot {{R_\rm B}\over{R_1 + R_\rm B}} = 1/2 \cdot U$ The internal resistance is given by substituting the ideal voltage source with its resistance ($=0 ~\Omega$, short-circuit). \begin{align*} R_i &= R_1 || R_\rm B \\ &= 10 ~\Omega \end{align*}

\begin{align*} u_c (t_2) &= U_s \cdot (1- e^{t_2/(R_i\cdot C)}) \\ &= {{1}\over{2}} \cdot U \cdot (1- e^{1~\rm{ms}/(10 ~\Omega \cdot 100 ~\rm{µF})}) \end{align*}

Exercise E4 Charging Capacitors
(written test, approx. 16 % of a 60-minute written test, WS2022)

4. Calculate the voltage $u_c (t_2)$ across the capacitor at $t_2=1 ~\rm{ms}$ after closing the switch.

Result

Hint: To solve this, first create an equivalent linear voltage source from U, R_1, and $R_\rm B$.

Result

The voltage across the capacitor is again $0 ~\rm{V}$ at the moment $t_0=0 ~\rm{s}$ when the switch S_1 is closed. Calculate the voltage $u_c (t_2)$ across the capacitor at $t_2=1 ~\rm{ms}$ after closing the switch.

Result

\begin{align*} t_1 &= 1.39 ~\rm{ms} \end{align*}

Solution

It does not change anything. The ideal voltage source provides the voltage of $U=12 ~\rm{V}$ independent of this resistor.

\begin{align*} \Delta W_R &= \Delta W_C \\ &= {{1}\over{2}} \cdot C \cdot U^2 \\ &= {{1}\over{2}} \cdot 100 ~\rm{µF} \cdot 12 ~\rm{V})^2 \end{align*}

On an alternative view, one can try to create an equivalent linear voltage source again. Then, the internal resistance is given by substituting the ideal voltage source is again short-circuiting R_2.

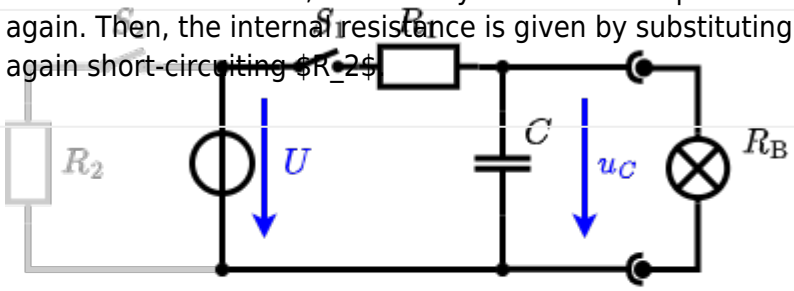

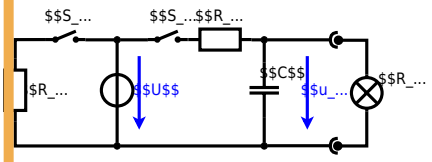

The circuit contains a voltage source $U=12 ~\rm{V}$, a switch S_1, a resistor of $R_1=20 ~\Omega$ and a capacitor of $C=100 ~\rm{µF}$.
The switch S_2 to an additional consumer R_2 will be considered to be open for the first tasks. At the moment $t_0=0 ~\rm{s}$ the switch S_1 is closed, the voltage across the capacitor is $u_c (t_0)=0 ~\rm{V}$.

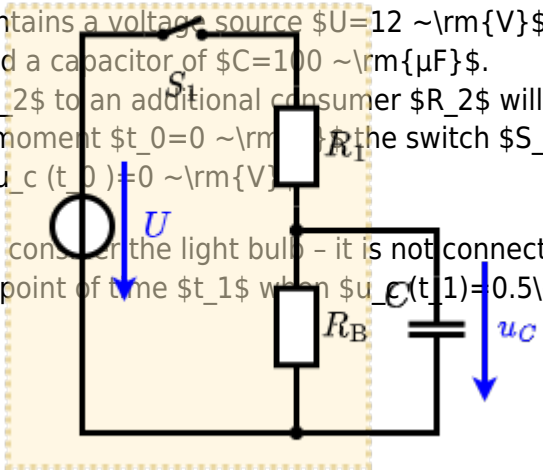

1. First do not consider the light bulb – it is not connected to the RC circuit.
Calculate the point of time t_1 when $u_c (t_1)=0.5\cdot U$.

Solution

An equivalent linear voltage source can be given with U, R_1, and $R_\rm B$ as seen in yellow.
Therefore, the voltage of the equivalent linear voltage source is: $U_s = U \cdot {{R_\rm B}\over{R_1 + R_\rm B}} = 1/2 \cdot U$ The internal resistance is given by substituting the ideal voltage source with its resistance ($=0 ~\Omega$, short-circuit).

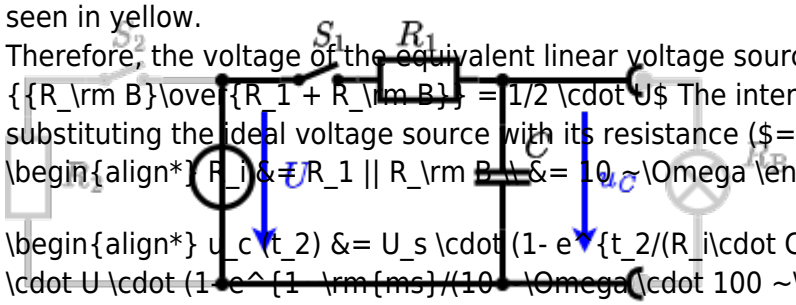

\begin{align*} R_i &= R_1 || R_\rm B \\ &= 10 ~\Omega \end{align*}

\begin{align*} u_c (t_2) &= U_s \cdot (1- e^{t_2/(R_i\cdot C)}) \\ &= {{1}\over{2}} \cdot U \cdot (1- e^{1 ~\rm{ms}/(10 ~\Omega \cdot 100 ~\rm{µF})}) \end{align*}
So, here only R_1 and C gives the time constant: $\tau = R_1 \cdot C$

The following formula describes the time course of $u_C(t)$ which has to be $u_c (t_1)=0.5\cdot U$: \begin{align*} u_c (t) = U \cdot (1- e^{t/\tau}) = 0.5\cdot U \end{align*} It has to be rearranged to t \begin{align*} (1- e^{t/\tau}) &= 0.5 \\ e^{t/\tau} &= 0.5 \\ t/\tau &= ln(0.5) \\ t &= \tau \cdot ln(0.5) \\ t &= R_1 \cdot C \cdot ln(0.5) \end{align*}

Exercise E2 Analyzing complex Impedances
(written test, approx. 14 % of a 60-minute written test, WS2022)

2. Calculate the phasor voltage $\underline{U}_1$ at the input of the two-port.
3. Calculate the phase angle φ_i between the input voltage and the input current.

Result

The analysis shall be done for the following numerical values:

$$\begin{aligned} R &= 0.24\ \Omega \\ \omega &= 10.7 \cdot 2\pi\ \mathrm{Hz} \\ C &= 3.32\ \mathrm{mF} \\ L &= 4.5\ \mathrm{mH} \end{aligned}$$

Solution

1. Calculate the physical values of the two components.

$$\begin{aligned} X_C &= \frac{1}{\omega \cdot C} = \frac{1}{2\pi \cdot 10.7\ \mathrm{Hz} \cdot 3.32\ \mathrm{mF}} = 4.48\ \Omega \\ X_L &= \omega \cdot L = 2\pi \cdot 10.7\ \mathrm{Hz} \cdot 4.5\ \mathrm{mH} = 0.302\ \Omega \end{aligned}$$

Solution

2. Calculate the phasor voltage $\underline{U}_1$ at the input of the two-port.

The current and voltage are in phase once there is only a pure ohmic (= pure real) resulting impedance $\underline{Z} = \underline{X}_2$.

Therefore, the component must be a capacitor with the same absolute value of impedance: $\underline{X}_C = \underline{X}_2$

$$\begin{aligned} \underline{I} &= \frac{\underline{U}}{\underline{Z}} = \frac{50\ \mathrm{V}}{0.24\ \Omega + \mathrm{j} \cdot 4.68\ \Omega} = \frac{50\ \mathrm{V}}{0.24\ \Omega + \mathrm{j} \cdot 4.68\ \Omega} \cdot \frac{0.24\ \Omega - \mathrm{j} \cdot 4.68\ \Omega}{0.24\ \Omega - \mathrm{j} \cdot 4.68\ \Omega} \\ &= \frac{50\ \mathrm{V} \cdot (0.24\ \Omega - \mathrm{j} \cdot 4.68\ \Omega)}{0.24^2\ \Omega^2 + 4.68^2\ \Omega^2} = 0.547\ \mathrm{A} - \mathrm{j} \cdot 10.67\ \mathrm{A} \end{aligned}$$

With the complex part comes the physical value

$$\underline{I} = 10.67\ \mathrm{A} \cdot \underline{\mathrm{j}}$$

Therefore $\underline{I}$ is purely imaginary.

Solution

3. The phase φ_i can be calculated as

$$\begin{aligned} \varphi_i &= \arctan\left(\frac{\mathrm{Im}\{\underline{I}\}}{\mathrm{Re}\{\underline{I}\}} \right) \\ &= \arctan\left(\frac{-4.68\ \Omega}{0.24\ \Omega} \right) \\ &= -87.06^\circ \end{aligned}$$

Exercise E5 Analyzing complex Impedances
(written test, approx. 14 % of a 60-minute written test, WS2022)

2. Calculate the phasor voltage $\underline{U}_1$ at the input of the two-port.
3. Calculate the phase angle φ_i between the input voltage and the input current.

Result

The analysis shall be done for the following numerical values:

$$\begin{aligned} R &= 0.24\ \Omega \\ \omega &= 10.7 \cdot 2\pi\ \mathrm{Hz} \\ C &= 3.32\ \mathrm{mF} \\ L &= 4.5\ \mathrm{mH} \end{aligned}$$

Solution

1. Calculate the physical values of the two components.

$$\begin{aligned} X_C &= \frac{1}{\omega \cdot C} = \frac{1}{2\pi \cdot 10.7\ \mathrm{Hz} \cdot 3.32\ \mathrm{mF}} = 4.48\ \Omega \\ X_L &= \omega \cdot L = 2\pi \cdot 10.7\ \mathrm{Hz} \cdot 4.5\ \mathrm{mH} = 0.302\ \Omega \end{aligned}$$

Solution

2. Calculate the phasor voltage $\underline{U}_1$ at the input of the two-port.

The current and voltage are in phase once there is only a pure ohmic (= pure real) resulting impedance $\underline{Z} = \underline{X}_2$.

Therefore, the component must be a capacitor with the same absolute value of impedance: $\underline{X}_C = \underline{X}_2$

$$\begin{aligned} \underline{I} &= \frac{\underline{U}}{\underline{Z}} = \frac{50\ \mathrm{V}}{0.24\ \Omega + \mathrm{j} \cdot 4.68\ \Omega} = \frac{50\ \mathrm{V}}{0.24\ \Omega + \mathrm{j} \cdot 4.68\ \Omega} \cdot \frac{0.24\ \Omega - \mathrm{j} \cdot 4.68\ \Omega}{0.24\ \Omega - \mathrm{j} \cdot 4.68\ \Omega} \\ &= \frac{50\ \mathrm{V} \cdot (0.24\ \Omega - \mathrm{j} \cdot 4.68\ \Omega)}{0.24^2\ \Omega^2 + 4.68^2\ \Omega^2} = 0.547\ \mathrm{A} - \mathrm{j} \cdot 10.67\ \mathrm{A} \end{aligned}$$

With the complex part comes the physical value

$$\underline{I} = 10.67\ \mathrm{A} \cdot \underline{\mathrm{j}}$$

Therefore $\underline{I}$ is purely imaginary.

Solution

3. The phase φ_i can be calculated as

$$\begin{aligned} \varphi_i &= \arctan\left(\frac{\mathrm{Im}\{\underline{I}\}}{\mathrm{Re}\{\underline{I}\}} \right) \\ &= \arctan\left(\frac{-4.68\ \Omega}{0.24\ \Omega} \right) \\ &= -87.06^\circ \end{aligned}$$

With the complex part comes the physical value: \begin{align*} X_L &= \omega L \\ L &= {{X_L}\over{2\pi \cdot f}} = {{4.68 ~\Omega}\over{2\pi \cdot 300 ~{\rm MHz}}} \\ &= 2.48 ~{\rm nH} \end{align*}

The phase shift can be calculated as \begin{align*} \varphi &= \arctan \left({{-4.68 ~\Omega}\over{0.24 ~\Omega}} \right) \\ &= \arctan \left({{-4.68 ~\Omega}\over{0.24 ~\Omega}} \right) \\ \end{align*}

Exercise E3 Impedances at different Frequencies (written test, approx. 18 % of a 60-minute written test, WS2022)

A resistor R_1 shall have the same absolute value of the impedance as a capacitor $C_1=40 ~{\rm nF}$ at $f_1=4 ~{\rm MHz}$.

Solution

\begin{align*} R_1 &= 1.00 ~\Omega \\ \end{align*}

A series circuit means that the current is constant on every component.

Parallel circuit means that the voltage is the same on R_3 and C_2.

Since $\underline{I}_{3R}$ is perpendicular to $\underline{I}_{3C}$ (It has to, since R_3 is perpendicular to $\underline{X}_{3C}$ too).

Therefore, the resulting current of the parallel circuit is given as: \begin{align*} \underline{I}_{3} &= \underline{I}_{3R} + \underline{I}_{3C} \\ |\underline{I}_{3}|^2 &= |\underline{I}_{3R}|^2 + |\underline{I}_{3C}|^2 \\ |\underline{I}_{3}| &= \sqrt{|\underline{I}_{3R}|^2 + |\underline{I}_{3C}|^2} \\ I_3 &= \sqrt{\left({{U}\over{R_2}} \right)^2 + \left({{U}\over{X_{L2}}} \right)^2} \\ &= \sqrt{\left({{60~\rm mA}\over{1}} \right)^2 + \left({{60~\rm mA}\over{2\pi \cdot 450~{\rm kHz} \cdot 4.7 ~ {\rm µH}}} \right)^2} \\ \end{align*}

Back to the first formula: \begin{align*} R_3 \cdot {I}_{3R} &= {X}_{3C} \cdot {I}_{3C} \\ R_3 &= {X}_{3C} \cdot {{{I}_{3C}}\over{{I}_{3R}}} \\ &= {{1}\over{2\pi \cdot f \cdot C_3}} \cdot {{\sqrt{|{I}_{3}|^2 - |{I}_{3R}|^2}}\over{{I}_{3R}}} \\ \end{align*}

Exercise E6 Impedances at different Frequencies (written test, approx. 18 % of a 60-minute written test, WS2022)

Result

Solution

Solution

Solution

1. A resistor R_1 shall have the same absolute value of the impedance as a capacitor $C_1=40 ~{\rm nF}$ at $f_1=4 ~{\rm MHz}$.

\begin{align*} R_1 &= 1.00 ~\Omega \\ \end{align*}

\begin{align*} R_3 &= 10.0 ~\Omega \\ \end{align*}

A series circuit means that the current is constant on every component.

The equivalent impedance for R and L combined is given by \begin{align*} {{\underline{U}}\over{\underline{I}}} &= R_2 + \underline{X}_{L2} \\ &= R_2 + \begin{align*} R_1 &= \underline{X}_{C1} &= {{1}\over{2\pi \cdot f\cdot C_1}} \\ &= {{1}\over{2\pi \cdot 4 ~{\rm MHz} \cdot 40 ~{\rm nF}}} \\ \end{align*}

Parallel circuit means that the voltage is the same on R_3 and C_3: $\underline{I}_{3R}$ is perpendicular to $\underline{I}_{3C}$. (It has to, since R_3 is perpendicular to $-{\rm j}\cdot{\rm X}_{3C}$, too)

Therefore, the resulting current of the parallel circuit is given as: \begin{align*} \underline{I}_{3} &= \underline{I}_{3R} + \underline{I}_{3C} \\ |\underline{I}_{3}|^2 &= |\underline{I}_{3R}|^2 + |\underline{I}_{3C}|^2 \\ \end{align*}

This can be rearranged to get R_2: \begin{align*} |\underline{I}_{3}|^2 &= |\underline{I}_{3R}|^2 + |\underline{I}_{3C}|^2 \\ |\underline{I}_{3}|^2 - |\underline{I}_{3R}|^2 &= |\underline{I}_{3C}|^2 \\ \end{align*}

Back to the first formula: \begin{align*} R_3 \cdot {I}_{3R} &= {X}_{3C} \cdot {I}_{3C} \\ R_3 &= {X}_{3C} \cdot {{{I}_{3C}}\over{{I}_{3R}}} \\ &= {{1}\over{2\pi \cdot f \cdot C_3}} \cdot {{\sqrt{|{I}_{3}|^2 - |{I}_{3R}|^2}}\over{{I}_{3R}}} \\ \end{align*}

Exercise E1 Complex Impedance Circuit
(written test, approx. 15 % of a 60-minute written test, WS2022)

Result

Solution

Result

1. Draw the circuit diagram of the given circuit.

Label all components, voltages, and currents.

Result

Solution

Result

This linear source is connected with an inductor of $330 ~ {\rm µH}$ and a capacitor of $30.22 ~{\rm µF}$, all in series.

\begin{align*} Z &= {{\hat{U}}\over{\hat{I}}} \\ \hat{I} &= {{\hat{U}}\over{Z}} \\ \end{align*}

With $I = {{1}\over{\sqrt{2}}}\cdot \hat{I}$: \begin{align*} I &= {{1}\over{\sqrt{2}}}\cdot {{\hat{U}}\over{Z}} \\ &= {{1}\over{\sqrt{2}}}\cdot {{3.0 ~{\rm V}}\over{19.28 ~\Omega}} \\ \end{align*}

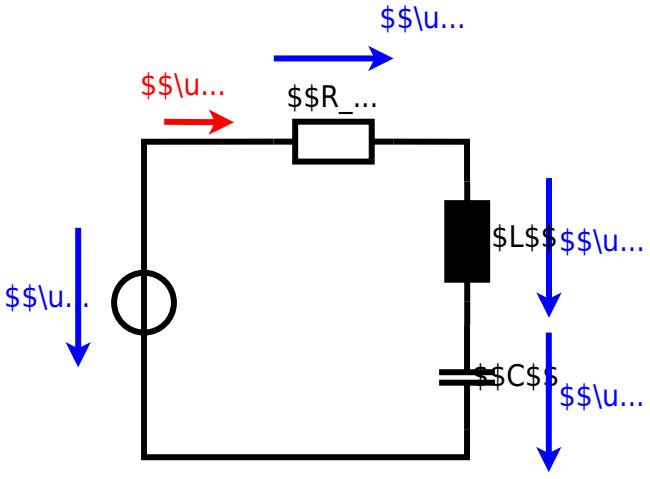
$$\u...
$$\u...
$$R_...
$L$$
$$\u...
$$\u...
$$C$$
$$\u...

Exercise E7 Complex Impedance Circuit
(written test, approx. 15 % of a 60-minute written test, WS2022)

1. Calculate the resulting complex impedance $\underline{Z}$ and its magnitude $|\underline{Z}|$ and phase φ_Z.
2. Calculate the current $\hat{I}$ and its magnitude I and phase φ_I.
3. Draw the circuit diagram of the given circuit.
4. Label all components, voltages, and currents.

Result

$$\begin{aligned} Z &= 19.7 \angle 31.1^\circ \Omega \\ \underline{Z} &= 16.9 \Omega + j \cdot 10.2 \Omega \end{aligned}$$

$$\begin{aligned} I &= 0.152 \text{ A} \\ \hat{I} &= 0.152 \text{ A} \angle -31.1^\circ \end{aligned}$$

Result

Solution

This linear source is connected with an inductor of $330 ~ {\rm µH}$ and a capacitor of $0.22 ~{\rm µF}$, all in series.

Result

$$\begin{aligned} Z &= 48.2 ~\Omega \\ \underline{Z} &= 19.8 ~\Omega \end{aligned}$$

Solution

$$\begin{aligned} Z &= {{\hat{U}}\over{\hat{I}}} \\ \hat{I} &= {{\hat{U}}\over{Z}} \\ \end{aligned}$$

$$\begin{aligned} Z_C &= {{1}\over{2\pi \cdot f \cdot C}}\\ &= {{1}\over{2\pi \cdot 15 ~{\rm kHz} \cdot 0.22 ~{\rm µF}}}\\ \end{aligned}$$

With $I = {{1}\over{\sqrt{2}}}\cdot \hat{I}$:

$$\begin{aligned} Z_L &= 2\pi \cdot f \cdot L\\ &= 2\pi\cdot 15 ~{\rm kHz} \cdot 0.22 ~{\rm µF}\\ \end{aligned}$$

$$\begin{aligned} I &= {{1}\over{\sqrt{2}}}\cdot {{\hat{U}}\over{Z}} \\ &= {{1}\over{\sqrt{2}}}\cdot {{3.0 ~{\rm V}}\over{19.28 ~\Omega}} \\ \end{aligned}$$

$$\begin{aligned} Z_C &= {{1}\over{2\pi \cdot f \cdot C}}\\ &= {{1}\over{2\pi \cdot 15 ~{\rm kHz} \cdot 330 ~{\rm µH}}}\\ \end{aligned}$$

$$\begin{aligned} \underline{Z} &= R + \underline{Z}_L + \underline{Z}_C \\ &= R + j \cdot {Z}_L - j \cdot {Z}_C \\ &= R + j \cdot ({Z}_L - {Z}_C) \\ |\underline{Z}| &= \sqrt{R^2 + (\underline{Z}_L - \underline{Z}_C)^2 }\\ \end{aligned}$$

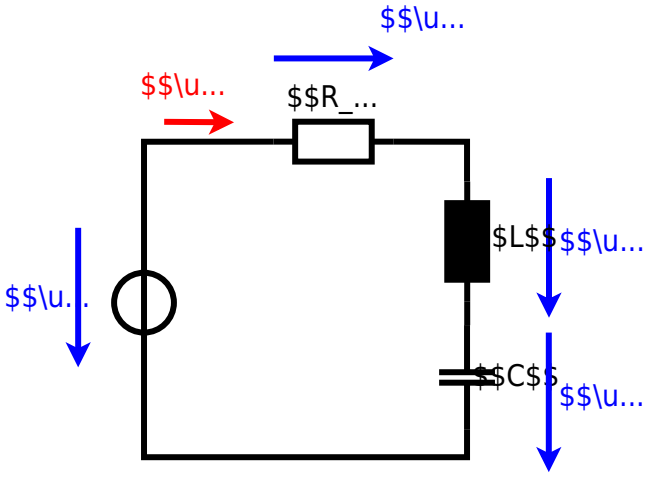
$$\u...
$$\u...
$$R_...
$L$$
$$\u...
$$\u...
$$C$$
$$\u...

From:
https://mexle.te.hs-heilbronn.de/ - **MEXLE Wiki**

Permanent link:
https://mexle.te.hs-heilbronn.de/electrical_engineering_1/ws2022_exam

Last update: **2023/08/17 11:43**